Leybold

Flanges and Fittings

ISO-KF, ISO-K, ISO-F, CF

Flanges and Fittings

280.00.02
Excerpt from the Leybold Full Line Catalog (Edition 03/2020)
Catalog Part Flanges and Fittings

Contents

Flanges and Fittings

General

Introduction 4

These Arguments Prove Leybold's QUALITY 5

Materials 6

The Right Connection from Leybold 7

Flange Connections 8

Products

ISO-KF Flange Fittings and Components 10

Version for the North and South American Continent 29

ISO-K Clamp Flange Fittings and Components 36

Version for the North and South American Continent 49

ISO-F and DIN EN 1092-1 Fixed Flange Fittings and Components 50

ISO-F Fixed Flange Fittings and Components 51

DIN EN 1092-1 Fixed Flange Fittings and Components 55

Version for the North and South American Continent 56

CF Flanges Fittings and Components 58

Observation Windows for Vacuum Systems 72

ISO-KF / ISO-K Observation Windows 73

CF Observation Windows 74

For information on electrical, rotary/linear motion and liquid feedthroughs, please refer to Catalog Part "Feedthroughs".

General to Flanges and Fittings

Introduction

According to DIN 28 400, the term "Ultra-high Vacuum (UHV)" designates the pressure range below 10^{-7} mbar.

Several physical quantities, such as mean free path, monolayer time, flow density of the particles impinging on the walls, leak rate and the degassing rate are of significance in the characterization of this pressure range. For the definitions of these quantities refer to technical publications on this subject.

In order to attain or maintain pressures below 10^{-7} mbar, the following pre-conditions must be met:

- The vapor pressure of the pump fluid or lubricant should be in accordance with the desired ultimate pressure
- the leak and degassing rates of the entire apparatus including its installations must be extremely low.

Generally, both leak rate and back-streaming effects through the pump can be kept at sufficiently low levels by using suitable UHV sealing materials and pumps.

However, a sufficiently low outgassing rate can only be achieved by baking out the entire apparatus at temperatures of about 300 °C (572 °F) for a longer period of time. It is only under these conditions that the mono-layers of atoms or molecules, which attach quite firmly to the surfaces of the vacuum apparatus including its installations, are desorbed.

Consequently, components for UHV systems are generally made of stainless steel. Metal gaskets, ceramic feedthroughs and bakeable observation windows are used exclusively.

For applications in the extreme UHV range (XHV) the outgassing rate of the CF flanges and the UHV components can be reduced by about two orders of magnitude by a special degassing process.

The high standard of development and manufacture combined with the use of high quality materials guarantee that UHV components from Leybold Vacuum are able to meet even the most demanding requirements.

Advantages to the User

- Stabilized Leybold knife-edge
- High reliability
- Special knife edge profiles ensure the highest degree of leak tightness
- Flange connection can be baked out up to 450 °C (842 °F)
- Easy to assemble, helium-tight
- Symmetrical flange connection
- Equal sealing profiles
- Small outside diameter with respect to the nominal width
- Can be joined by welding or brazing using any desired process, also with other nickel chromium steel grades
- For use either with a flat gasket made of OFHC copper (oxygen-free) or FPM (FKM) O-ring
- Self-centering
- Fixed and rotary flanges in almost any size

These Arguments Prove Leybold's QUALITY

- Availability of all components at short notice
- Worldwide advice at any time to answer your questions relating to vacuum systems
- Utilization of most advanced manufacturing methods
- Environment-friendly cleaning baths with complete waste disposal and recycling facilities
- Environment-friendly and secure packaging
- Total Quality Management methods during all processing stages
- Controlled material quality
- Compatible to your existing flanges of the same system
- Highly leak-tight down to leak rates of 1 x 10^{-9} mbar x l/s; all components are subjected to a helium leak test
- Low outgassing rates of the materials through
  - choice of the right material quality, especially for vacuum apparatus
  - excellent cleaning methods
- Documentation available for all components

- The well-proven Leybold geometry for the cutting edges

The stabilized Leybold profile for the cutting edges

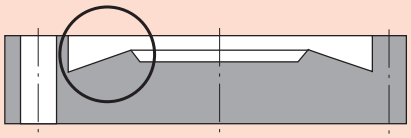

Diagrammatic view

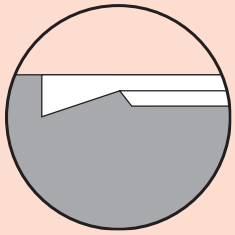

Partial view

- **Forged steel materials** of **high tensile strength and density**
- Material quality for standard applications DIN **1.4301 corresponds to AISI 304**
- Tightly checked, **close dimensional tolerances** for the entire sealing geometry
- **Low degassing rates** of the tube material used

Advantages

Reliable sealing of UHV connections over hundreds of heating cycles

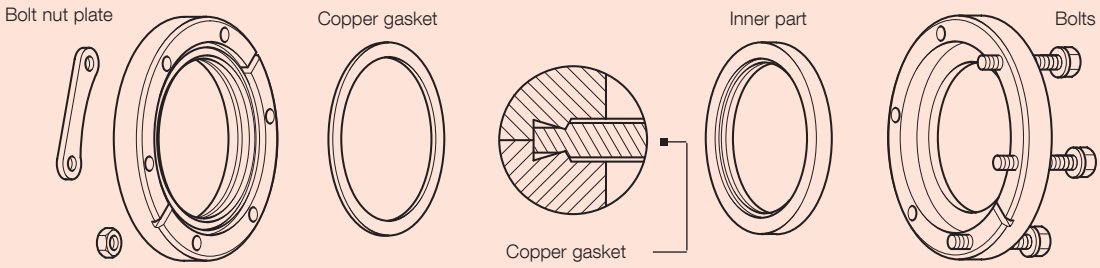

General

Vacuum systems (i.e. systems for pressures ranging from 2.5 bar to 10^{-9} mbar (1.9 x 10^{-3} Torr to 0.75 x 10^{-9} Torr)) are quickly and easily assembled owing to the modular construction principle which is based on interchangeable standard components by means of vacuum-tight, demountable flange connections. Individual components may be exchanged easily at any time. Depending on the intended use and size of the connection, flanges of different types have been developed. The ISO-KF flange connection was developed by Leybold many years ago and has been widely accepted by all users of vacuum equipment. This catalog part lists all flange connections and fittings including adaptors for ultra-high vacuum components.

Components marked with [< 1000 mbar (< 750 Torr)] are not allowed for use at pressures exceeding 1000 mbar abs.

The components and flange connections are intended for use in connection with vacuum systems. They have not been designed to support mechanical loads. All loads must be supported separately at the connection components.

When mounting turbo molecular vacuum pumps onto flanges the maximum crash momentum needs to be considered. Additional fixing of the pump might be necessary.

Flange Designations

The designations used by Leybold Vacuum for clamp flanges, fixed flanges (bolted) and collar flanges with retaining rings correspond both to the international standards [1] and to the usual nomenclature in vacuum technology.

Materials

Stainless Steel

German Material No.	AISI/ SAE	DIN Designation
1.4301	304	X5 CrNi 18 10
1.4305	303	X10 CrNi S 18 9
1.4306	304 L	X2 CrNi 19 11
1.4310	301	X12 CrNi 17 7
1.4401	316	X5 CrNiMo 17 12 2
1.4404	316 L	X2 CrNiMo 17 12 2
1.4435	316 L	X2 CrNiMo 18 14 3
1.4541	321	X10 CrNiTi 18 9
1.4571	316 Ti	X6 CrNiMoTi 17 12 2
1.4552	–	X5 CrNiNb 18 9

Aluminium

German Material No.	AISI	DIN Designation
3.0255.10	AA 1050 1-0	Al 99.5 w
3.2162.05	380.0 (AA)	GD-AlSi8Cu3
3.2315.08	6082-F (AA)	AlMgSi1
3.2315.71	6082-T6	AlMgSi1
3.2315.72	6063 (AA)	AlMgSi1
3.2381.02	520.0 (AA)	GK AlSi 10 Mg
3.2381.62	520.0 (AA)	GK AlSi 10 Mgwa
3.2582.05	160 X	GD-AlSi 12

JIS	AISI	DIN Designation
ADC12	383	AlSi11Cu2(Fe)

[1] The nominal width DN corresponds only approximately to the inner diameter, i.e. is not necessarily identical to the inner diameter. Differences in the actual inner diameter are quite normal in practice and do not contravene standards.

Steel

German Material No.	AISI	DIN Designation
1.0037	–	St 37-2
1.0308	–	St 35
1.0831	–	St 52
1.1141	–	CK 15
1.1181	–	CK 35

Gaskets

Code Designation	Chemical Designation	Typical Trade Name
CR	Chloroprene-caoutchouc	Neoprene
FPM (FKM)	Fluor-caoutchouc	Viton®
NBR	Acrylonitrile-butadienrubber	Perbunan®
PTFE	Polytetrafluor-ethylene	Teflon®
EPDM	Ethylene propylene dien rubber	–

Hoses and Tubes

Code Designation	Chemical Designation	Typical Trade Name
NR	Natural rubber	–
PVC	Polyvinylchloride	–

The Right Connection from Leybold

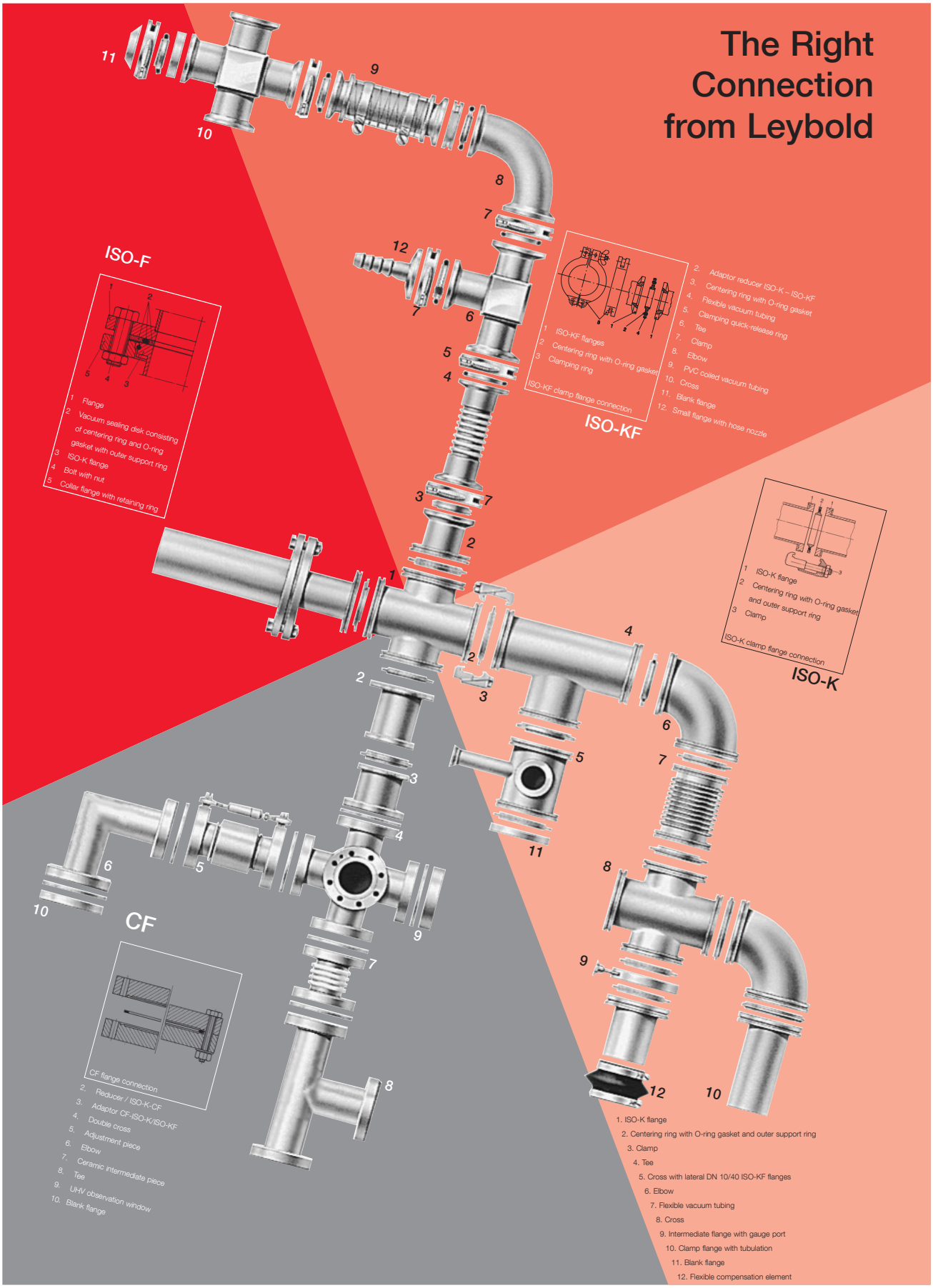

Flange Connections

ISO-KF Connection

The ISO-KF connection (to DIN 28 403 and ISO 2861) permits rapid fitting and replacement of components in vacuum systems. It consists of two symmetrical ISO-KF flanges **(1)**, a centering ring with O-ring gasket **(2)** and a clamping ring **(3)**. High vacuum tight ISO-KF connections can be made without the use of tools simply by turning the wing nut of the clamping ring.

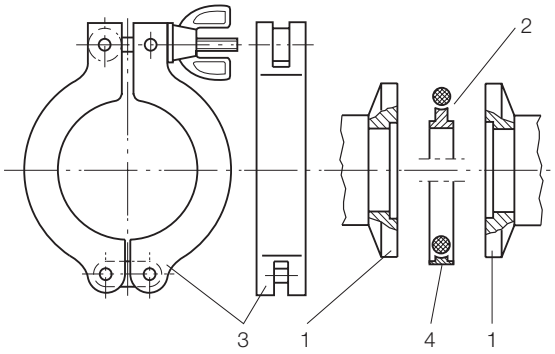

1 Small flange
2 Centering ring with O-ring
3 Clamping ring
4 Outer centering ring with O-ring

ISO-KF flange connection

ISO-K Clamp Flange Connection

The clamp flange connection (to DIN 28 404 and ISO 1609) allows components from DN 63 to DN 630 to be connected in any position regardless of the bolt hole arrangement on any fixed flanges.

It consists of two clamp flange components **(1)**, a centering ring **(2)** with an outer ring enclosing the O-ring gasket, and several clamps **(3)** which the connection is assembled and tightened with. Since the centering ring can be firmly inserted into the centering groove of the flange, even horizontal connections are quickly and easily fitted.

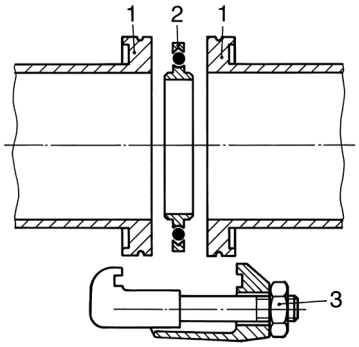

1 Clamp flange
2 Centering ring and O-ring with outer supporting ring
3 Clamp

ISO-K clamp flange connection

ISO-F / DIN Fixed Bolted Flange Fittings

With the appropriate collar flanges, the clamp flange can be connected to various fixed bolted flange systems (ISO-F, DIN EN 1092-1, etc.) see figures in chapter “ISO-F and DIN EN 1092-1 Fixed Flange Fittings”.

CF Flanges and Components

The CF flange connection consists of two geometrically identical flanges with a flat gasket made of OFHC copper, bolts and nuts and washers.

CF components are made of selected, corrosion resistant types of stainless steel.

All components are inside welded to prevent right from the beginning any cracks or pocket holes which might constitute a so-called virtual leak.

Bake Out Temperatures for the Gaskets

CR and FPM (FKM) gaskets can be inserted in all listed flange types, while aluminium gaskets may be used for higher vacuum requirements.

CR gaskets can be used in the temperature range from -40 °C to +100 °C [-40 °F to +212 °F] (max. bakeout temperature), FPM (FKM) gaskets from -15 °C to +150 °C [+5 °F to +302 °F] (max. bakeout temperature). Aluminium gaskets from -196 °C to +200 °C [-321 °F to +392 °F] (max. bakeout temperature gradient; ΔT max. 2.5 °/min).

1 ISO-K flanges
2 Vacuum sealing disk consisting of centering ring and O-ring with outer support ring
3 Retaining rings
4 ISO-F collar flanges
5 Bolt with nut

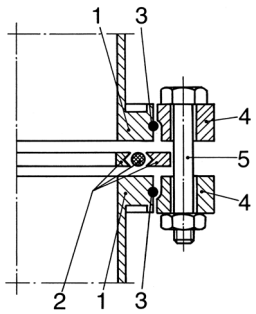

Clamped flange connection with collar flanges

1 Flange to DIN EN 1092-1 ND6
2 Sealing disk consisting of centering ring and O-ring with outer support ring
3 ISO-K flange
4 Bolt with nut
5 Collar flange with retaining ring to DIN EN 1092-1 ND6

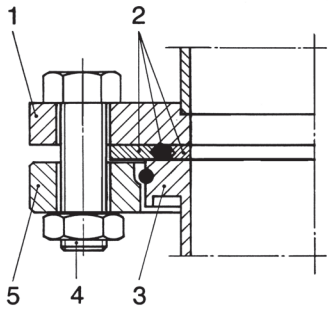

Connection between a DIN EN 1092-1 ND 6 flange and an ISO-K flange with DIN EN 1092-1 collar flange

ISO-KF
Flange Fittings and Components

DN 16 ISO-KF to DN 50 ISO-KF Aluminium Design (to DIN 28 403) [Tubes similar DIN 28 403]

The small flange connection developed by Leybold has become the basis of the international standard for vacuum technology.

Advantages to the User (Aluminium and Stainless Steel)

- Quick, safe and reliable
- No tools are need to provide a vacuum-tight seal
- Suitable down to pressures of 10^{-7} mbar (0.75 x 10^{-7} Torr)
- Suitable up to pressures of 2.5 bar (36 psi) with inner centerring ring and clamping ring/quick clamping ring
- Suitable up to pressures of 5 bar (33 psi) with outside ring resp. ultra sealing ring and 3-part clamping ring
- Easy to disassemble and clean
- In the case of special requirements as to degassing for the purpose of reducing the outgassing rate and in case of special requirements as to corrosion resistance, we recommend the use of stainless steel components.

Additional Benefits of the Stainless Steel Types

- With metal seals suitable for pressures down to 10^{-9} mbar (0.75 x 10^{-9} Torr)
- Can be baked out up to 200 °C (392 °F) when using metal seals or UHV aluminium rings
- Can be degassed up to 150 °C (302 °F) with FPM (FKM) gaskets
- Corrosion resistant
- Low degassing rate

Flexible Compensation Elements

Vacuum systems and pump systems often require components which are capable of protecting sensitive instruments against impacts or excessive vibrations while linking tubes at the same time.

Advantages to the User

- Easy and quick to install
- Safe and reliable
- Tubes may be turned in any direction
- No centering and sealing ring required
- Capable of withstanding temperatures up to 80 °C (176 °F)
- Suitable for pressures down to 10^{-5} mbar (0.75 x 10^{-5} Torr)

Quick Clamping Ring

Advantages to the User

- Quick and effective fitting and disassembly
- Can be fitted with one hand
- Closing action via lever with clamping spring
- Corrosion resistant

Fitting a centering ring to a ISO-KF component

Quick clamping ring

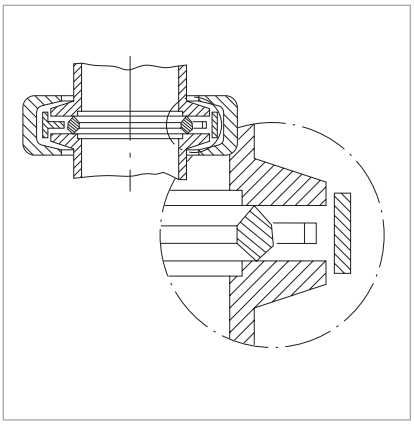

Small flange connection with ultra sealing ring

Fitting an elbow

Clamping ring for ultra sealing disk

Small flange connection with clamping ring

Small flange components made of stainless steel

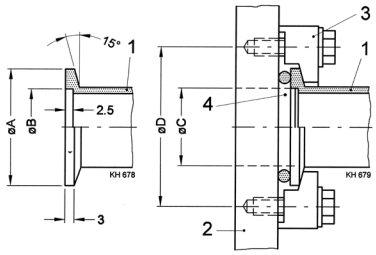

1 Small flange port
2 Housing wall with threaded tap
3 Claw
4 Centering ring

Small flange connection

Technical Data

Nominal diameter		A	B	C	D	Number of claws
DN 10 ISO-KF	mm	30	12,2	12,2	45	4
	in.	1.18	0.48	0.48	1.77	
DN 16 ISO-KF	mm	30	17,2	17,2	45	4
	in.	1.18	0.68	0.68	1.77	
DN 25 ISO-KF	mm	40	26,2	26,2	55	4
	in.	1.57	1.03	1.03	2.17	
DN 40 ISO-KF	mm	55	41,2	41,2	71	4
	in.	2.17	1.62	1.62	2.80	
DN 50 ISO-KF	mm	75	52,4	52,4	91	4
	in.	2.95	2.06	2.06	3.58	

Centering Rings (Al AW-6082-T6/Stainless Steel 1.4301) with O-Ring (CR / FPM (FKM))

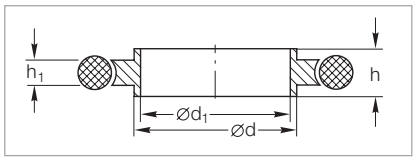

Dimensional drawing for the centering rings with O-ring

Technical Data

DN	ISO-KF	10	16	20	25	32	40	50
d	mm (in.)	12 (0.47)	17 (0.67)	22 (0.87)	26 (1.02)	34 (1.34)	41 (1.61)	52 (2.05)
d_1	mm (in.)	10 (0.40)	16 (0.63)	20 (0.79)	25 (0.98)	32 (1.26)	40 (1.57)	50 (1.97)
h	mm (in.)	8 (0.31)	8 (0.31)	8 (0.31)	8 (0.31)	8 (0.31)	8 (0.31)	8 (0.31)
h_1	mm (in.)	3.9 (0.15)	3.9 (0.15)	3.9 (0.15)	3.9 (0.15)	3.9 (0.15)	3.9 (0.15)	3.9 (0.15)

Ordering Information

Aluminim/CR	Part No.	**183 21**	**183 26**	**183 22**	**183 27**	**183 23**	**183 28**	**183 25**
Aluminim/FPM (FKM)	Part No.	**182 01**	**182 06**	**182 02**	**182 07**	**182 03**	**182 08**	**182 05**
Aluminim/FPM (FKM) (Set of 10 pcs)	Part No.	**-**	**210841V01**	**210842V01**	**210843V01**	**210844V01**	**210845V01**	**210846V01**
Stainless steel/FPM (FKM)	Part No.	**883 21**	**883 46**	**883 22**	**883 47**	**883 23**	**883 48**	**883 25**

Centering Rings (Stainless Steel) with Sintered Metal Filter (Stainless Steel 1.4404 and O-Ring (FPM (FKM))

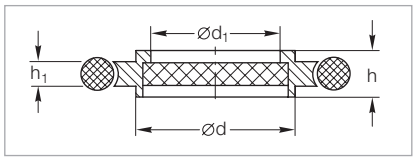

Dimensional drawing for the centering rings with sintered metal filter and O-ring

Sintered metal filter:
Air throughput at 20 °C (68 °F) and 200 mbar differential pressure approx. 1 $m^3 \times h^{-1} \times cm^2$, pore size: 20 µm

Technical Data

DN	ISO-KF	10	16	25	40	50
d	mm (in.)	12 (0.47)	17 (0.67)	26 (1.02)	41 (1.61)	52 (2.05)
d_1	mm (in.)	8 (0.31)	14 (0.55)	23 (0.91)	38 (1.50)	48 (1.89)
h	mm (in.)	8 (0.31)	8 (0.31)	8 (0.31)	8 (0.31)	8 (0.31)
h_1	mm (in.)	3.9 (0.15)	3.9 (0.15)	3.9 (0.15)	3.9 (0.15)	3.9 (0.15)

Ordering Information

Stainless steel	Part No.	**883 50**	**883 51**	**883 52**	**883 53**	**883 54**

Important: In the table of Chapter “General” the German designation for the type of steel is also stated in accordance with AISI.

Centering Rings with Fine Filter (Stainless Steel 1.4305) with O-Ring (FPM (FKM))

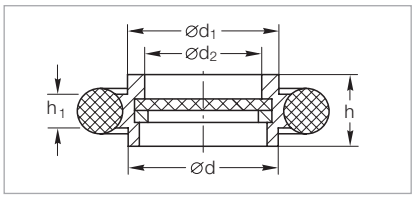

Dimensional drawing for the centering rings with fine filter

Filter material:
Stainless steel mesh 1.4404,
size of pore: 4 µm

Separation grade:
1 µm particles to 98%
(Filter material not available seperately)

Technical Data

DN	ISO-KF	10	16	25	40	50
d	mm (in.)	12 (0.47)	17 (0.67)	26 (1.02)	41 (1.61)	52 (2.05)
d_1	mm (in.)	12 (0.47)	17 (0.67)	26 (1.02)	41 (1.61)	52 (2.05)
d_2	mm (in.)	9 (0.35)	13 (0.51)	22 (0.87)	35.5 (1.4)	46 (1.81)
h	mm (in.)	8 (0.31)	8 (0.31)	8 (0.31)	8 (0.31)	8 (0.31)
h_1	mm (in.)	3.9 (0.15)	3.9 (0.15)	3.9 (0.15)	3.9 (0.15)	3.9 (0.15)

Ordering Information

Stainless steel	Part No.	**883 95**	**883 96**	**883 97**	**883 98**	**883 99**

Centering Ring Adaptors (Al AW-6082-T6/Stainless Steel 1.4301) with O-ring (NBR / FPM (FKM))

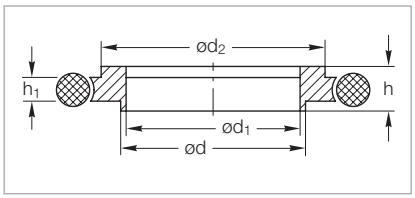

Dimensional drawing
for the centering ring adaptors with O-ring

Technical Data

DN	ISO-KF	10/16	20/25	32/40
d	mm (in.)	12 (0.47)	22 (0.87)	34 (1.34)
d_1	mm (in.)	10 (0.40)	20 (0.79)	32 (1.26)
d_2	mm (in.)	17 (0.67)	26 (1.02)	41 (1.61)
h	mm (in.)	8 (0.31)	8 (0.31)	8 (0.31)
h_1	mm (in.)	3.9 (0.15)	3.9 (0.15)	3.9 (0.15)

Ordering Information

Aluminium/FPM (FKM)	Part No.	**182 56**	**182 57**	**182 58**
Aluminium/FPM (FKM) (Set of 10 pcs)	Part No.	**-**	**210848V01**	**-**
Aluminium/NBR	Part No.	**183 56**	**183 57**	**183 58**
Stainless steel/FPM (FKM)	Part No.	**883 56**	**883 57**	**883 58**

Important: In the table of Chapter “General” the German designation for the type of steel is also stated in accordance with AISI.

Outer Centering Rings (Al AW-6082-T6) with O-Ring (CR / FPM (FKM))

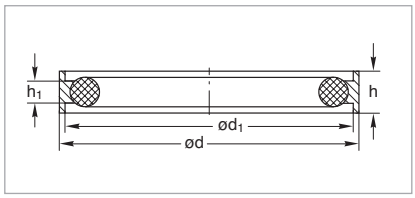

Dimensional drawing for the outer centering rings with O-ring

Technical Data

DN	ISO-KF	10/16	20/25	32/40	50
d	mm (in.)	32 (1.26)	42 (1.65)	57 (2.24)	77 (3.03)
d_1	mm (in.)	30.2 (1.19)	40.2 (1.58)	55.2 (2.17)	75.2 (2.96)
h	mm (in.)	7 (0.28)	7 (0.28)	7 (0.28)	7 (0.28)
h_1	mm (in.)	3.9 (0.15)	3.9 (0.15)	3.9 (0.15)	3.9 (0.15)

Ordering Information

Aluminium/CR	Part No.	**183 50**	**183 51**	**183 52**	**183 59**
Aluminium/FPM (FKM)	Part No.	**183 53**	**183 54**	**183 55**	**183 60**

Spare O-Ring Gaskets for ISO-KF Flange Connections

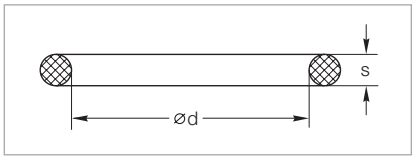

Dimensional drawing for the spare O-ring gaskets for ISO-KF flange connections

Technical Data

DN	ISO-KF	10	16 [1]	20	25 [1]	32	40 [1]	50
d	mm (in.)	15 (0.59)	18 (0.71)	25 (0.98)	28 (1.10)	40 (1.57)	42 (1.65)	55 (2.17)
s	mm (in.)	5 (0.20)	5 (0.20)	5 (0.20)	5 (0.20)	5 (0.20)	5 (0.20)	5 (0.20)

Ordering Information

FPM (FKM) (Set of 10 pcs)	Part No.	**ES210600**	**ES210605**	**ES210610**	**ES210615**	**ES210620**	**ES210625**	**ES210630**

[1] Also for adaptor/centering rings

Ultra Sealing Rings (Aluminium 3.2315.71)

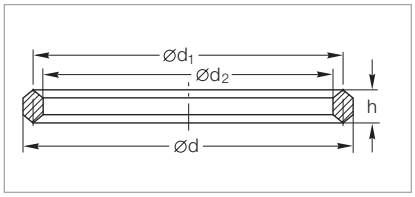

Dimensional drawing for the ultra sealing rings

Technical Data

DN	ISO-KF	10/16	20/25	32/40	50
d	mm (in.)	25.6 (1.01)	35.6 (1.40)	50.6 (1.99)	65.6 (2.58)
d_1	mm (in.)	22.6 (0.89)	32.6 (1.38)	47.6 (1.87)	62.6 (2.46)
d_2	mm (in.)	19.6 (0.77)	29.6 (1.17)	44.6 (1.76)	59.6 (2.35)
h	mm (in.)	4.5 (0.18)	4.5 (0.18)	4.5 (0.18)	4.5 (0.18)

Ordering Information

Aluminium (set of 3 pieces)	Part No.	**883 73**	**883 75**	**883 77**	**883 79**

Important: In the table of Chapter "General" the German designation for the type of steel is also stated in accordance with AISI.

Outer Support Rings (Stainless Steel 1.4310) for Ultra Sealing Rings

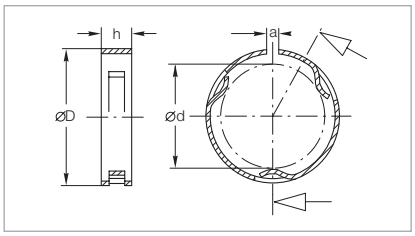

Dimensional drawing for the outer support rings

Technical Data

DN	ISO-KF	10/16	20/25	32/40	50
a	mm (in.)	3 (0.12)	3 (0.12)	3 (0.12)	3 (0.12)
D	mm (in.)	32 (1.26)	42 (1.65)	57 (2.24)	77 (3.03)
d	mm (in.)	25 (0.98)	35 (1.38)	50 (1.97)	65 (2.56)
h	mm (in.)	7 (0.28)	7 (0.28)	7 (0.28)	7 (0.28)

Ordering Information

Stainless steel	Part No.	**883 74**	**883 76**	**883 78**	**883 69**

Clamping Rings (ADC 12)

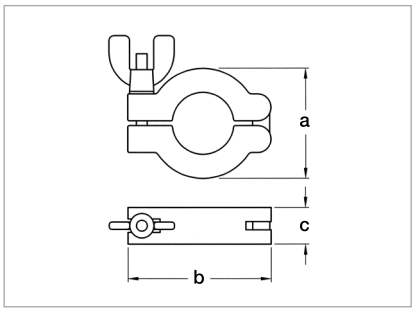

Dimensional drawing for the clamping rings

Max. torque at the wing nut: 2 Nm

Technical Data

DN	ISO-KF	10/16	20/25	32/40	50
a	mm (in.)	45 (1.77)	55 (2.17)	70 (2.76)	92 (3.62)
b	mm (in.)	63 (2.48)	72 (2.83)	90 (3.54)	113 (4.45)
c	mm (in.)	16 (0.63)	16 (0.63)	16 (0.63)	20 (0.79)

Ordering Information

Aluminium	Part No.	**183 41**	**183 42**	**183 43**	**183 45**

Important: In the table of Chapter “General” the German designation for the type of steel is also stated in accordance with AISI.

Quick Clamping Rings (Aluminium 3.2582.05)

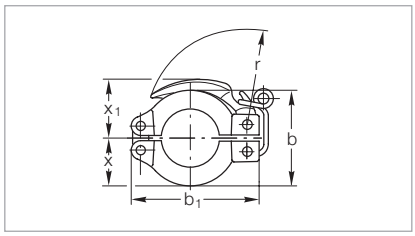

Dimensional drawing for the quick clamping rings

Technical Data

DN	ISO-KF	10/16	20/25	32/40
b	mm (in.)	45 (1.77)	55 (2.17)	70 (2.76)
b_1	mm (in.)	61 (2.40)	72 (2.83)	90 (3.54)
r	mm (in.)	48 (1.89)	56 (2.20)	74 (2.91)
x	mm (in.)	22 (0.87)	27 (1.06)	35 (1.38)
x_1	mm (in.)	30 (1.18)	34 (1.34)	44 (1.73)

Ordering Information

Aluminium	Part No.	**183 46**	**183 47**	**183 48**

Clamping Collars (Aluminium 3.2162.05) for Ultra Sealing Rings

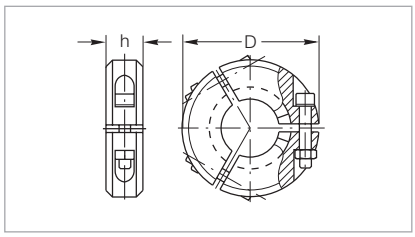

Dimensional drawing for the clamping collars for ultra sealing rings

Technical Data

DN	ISO-KF	10/16	20/25	32/40	50
D	mm (in.)	52 (2.05)	75 (2.95)	90 (3.54)	115 (4.52)
h	mm (in.)	18 (0.71)	20 (0.79)	23 (0.90)	28 (1.10)
Hexagon socket screw to DIN 912	mm	M 4 x 30	M 6 x 30	M 8 x 35	M 8 x 50
	(in.)	(M 4 x 1.18)	(M 6 x 1.18)	(M 8 x 1.38)	(M 8 x 1.97)

Ordering Information

Aluminium	Part No.	**882 75**	**882 77**	**882 78**	**882 79**

Important: In the table of Chapter “General” the German designation for the type of steel is also stated in accordance with AISI.

Blank Flanges (Al AW-6082-T6 / Stainless Steel 1.4301)

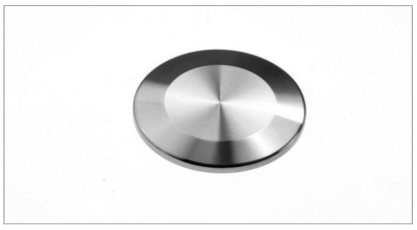

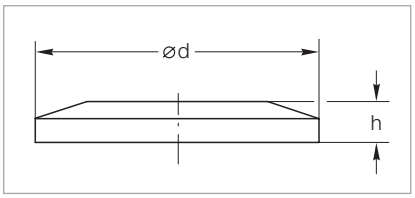

Dimensional drawing for the blank flanges

Technical Data

DN	ISO-KF	10	16	25	40	50
d	mm (in.)	30 (1.18)	30 (1.18)	40 (1.57)	55 (2.17)	75 (2.95)
h	mm (in.)	5 (0.20)	5 (0.20)	5 (0.20)	5 (0.20)	6 (0.24)

Ordering Information

Aluminium	Part No.	**184 41**	**184 46**	**184 47**	**184 48**	**184 45**
Stainless steel	Part No.	**884 41**	**884 36**	**884 37**	**884 38**	**884 45**

Claw, complete (Aluminium 3.2315.08)

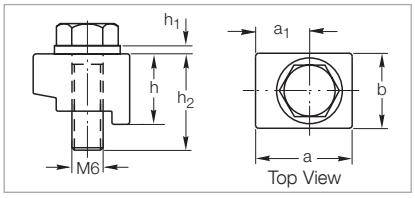

Dimensional drawing for the claw, complete

Technical Data

DN	ISO-KF	10 - 50
a	mm (in.)	19.5 (0.77)
a_1	mm (in.)	11.5 (0.45)
b	mm (in.)	14.0 (0.55)
h	mm (in.)	12.5 (0.49)
h_1	mm (in.)	1.6 (0.06)
h_2	mm (in.)	20.0 (0.79)

Ordering Information

Aluminium (Set of 4 pieces)	Part No.	**885 00**

Important: In the table of Chapter “General” the German designation for the type of steel is also stated in accordance with AISI.

ISO-KF Flanges with Short Tubulation (Steel 1.0037 / Stainless Steel 1.4301)
Flange according DIN 28403; Tube diameter different

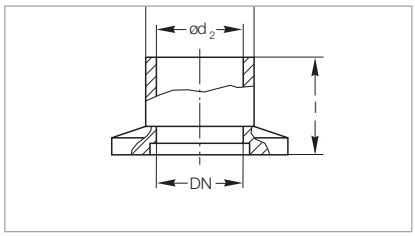

Dimensional drawing for the ISO-KF flanges with short tubulation

Technical Data

DN	ISO-KF	10	25	40	50
d_1 (Steel/Stainless steel)	mm (in.)	16/16 (0.63/0.63)	30/30 (1.18/1.18)	45/45 (1.77/1.77)	55/54 (2.17/2.13)
d_2 (Steel/Stainless steel)	mm (in.)	12/12 (0.47/0.47)	26/26 (1.02/1.02)	41/41 (1.61/1.61)	51/50 (2.01/1.97)
l	mm (in.)	20 (0.79)	20 (0.79)	20 (0.79)	20 (0.79)

Ordering Information

Steel	Part No.	**182 31**	**182 33**	**182 34**	**182 35**
Stainless steel	Part No.	**866 31**	**866 33**	**866 34**	**866 35**

ISO-KF Flanges with Long Tubulation (Steel 1.0037 / Stainless Steel 1.4301)
Flange according DIN 28403; Tube diameter different

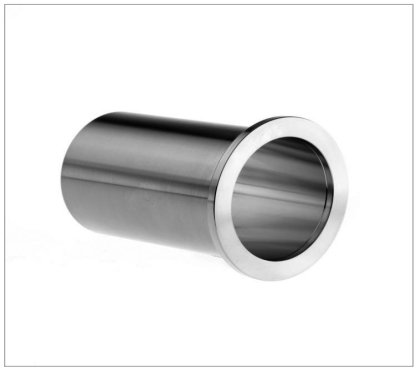

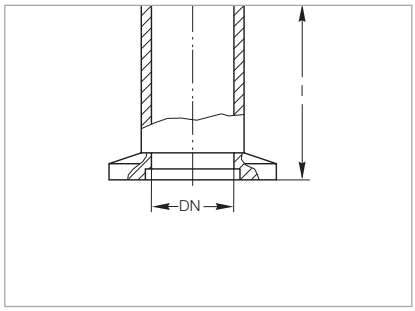

Dimensional drawing for the ISO-KF flanges with long tubulation

Technical Data

DN	ISO-KF	10	25	40	50
d_1 (Steel/Stainless steel)	mm (in.)	16/16 (0.63/0.63)	30/30 (1.18/1.18)	45/45 (1.77/1.77)	55/54 (2.17/2.13)
d_2 (Steel/Stainless steel)	mm (in.)	12/12 (0.47/0.47)	26/26 (1.02/1.02)	41/41 (1.61/1.61)	51/50 (2.01/1.97)
l	mm (in.)	70 (2.76)	70 (2.76)	70 (2.76)	70 (2.76)

Ordering Information

Steel	Part No.	**182 81**	**182 83**	**182 84**	**182 85**
Stainless steel	Part No.	**866 81**	**866 83**	**866 84**	**866 85**

Important: In the table of Chapter “General” the German designation for the type of steel is also stated in accordance with AISI.

ISO-KF Flanges with Short Tubulation (Steel 1.0037 / Stainless Steel 1.4301)
Flange and tube according DIN 28403

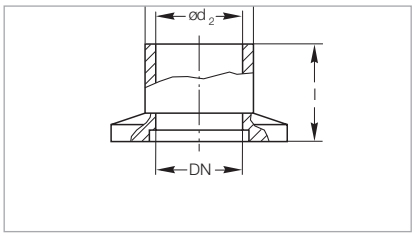

Dimensional drawing for the ISO-KF flanges with short tubulation

Technical Data

DN	ISO-KF	10	16	25	40	50
d_1	mm (in.)	14 (0.55)	20 (0.79)	28 (1.10)	44,5 (1.75)	57 (2.24)
d_2	mm (in.)	10 (0.39)	16 (0.63)	24 (0.94)	40,5 (1.59)	50,6 (1.99)
l	mm (in.)	20 (0.79)	20 (0.79)	20 (0.79)	20 (0.79)	20 (0.79)

Ordering Information

Steel	Part No.	**182 31D**	**182 32**	**182 33D**	**182 34D**	**182 35D**
Stainless steel	Part No.	**866 31D**	**866 32**	**866 33D**	**866 34D**	**866 35D**

ISO-KF Flanges with Long Tubulation (Steel 1.0037 / Stainless Steel 1.4301)
Flange and tube according DIN 28403

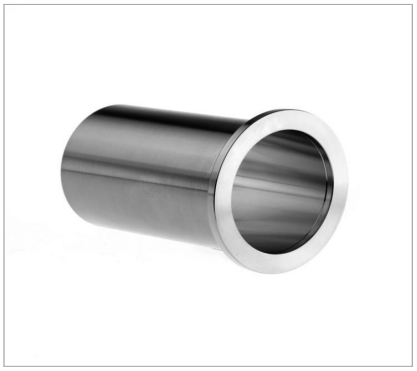

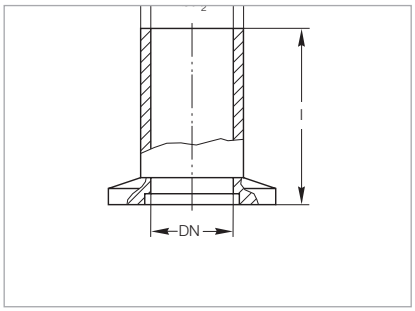

Dimensional drawing for the ISO-KF flanges with long tubulation

Technical Data

DN	ISO-KF	10	16	25	40	50
d_1	mm (in.)	14 (0.55)	20 (0.79)	28 (1.10)	44,5 (1.75)	57 (2.24)
d_2	mm (in.)	10 (0.39)	16 (0.63)	24 (0.94)	40,5 (1.59)	50,6 (1.99)
l	mm (in.)	70 (2.76)	70 (2.76)	70 (2.76)	70 (2.76)	70 (2.76)

Ordering Information

Steel	Part No.	**182 81D**	**182 82**	**182 83D**	**182 84D**	**182 85D**
Stainless steel	Part No.	**866 81D**	**866 82**	**866 83D**	**866 84D**	**866 85D**

Important: In the table of Chapter "General" the German designation for the type of steel is also stated in accordance with AISI.

Intermediate Pieces (Al AW-6082-T6 / Stainless Steel 1.4301)

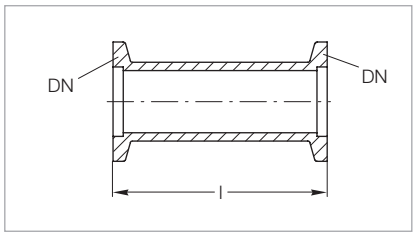

Dimensional drawing for the intermediate pieces

Technical Data

DN	ISO-KF	80 (3.15)	100 (3.94)	130 (5.12)
l	mm (in.)	80	100	130

Ordering Information

Aluminium	Part No.	**184 80**	**184 81**	**184 82**
Stainless steel	Part No.	**884 17**	**884 18**	**884 19**

Reducers (Al AW-6082-T6 / Stainless Steel 1.4301)

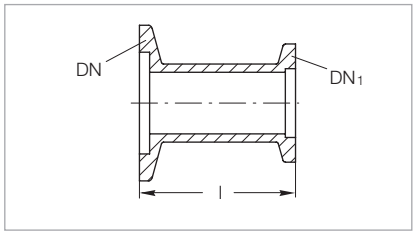

Dimensional drawing for the reducers

Technical Data

DN/DN_1	ISO-KF	25/16	40/16	40/25	50/40
l	mm (in.)	40 (1.57)	40 (1.57)	40 (1.57)	40 (1.57)

Ordering Information

Aluminium	Part No.	**183 86**	**183 89**	**183 87**	**183 88**
Stainless steel	Part No.	**885 04**	**885 07**	**885 05**	**885 06**

Pipe Bend 90° (Stainless Steel 1.4301) / Mitred Elbow 90° (Aluminium 3.2315.08)

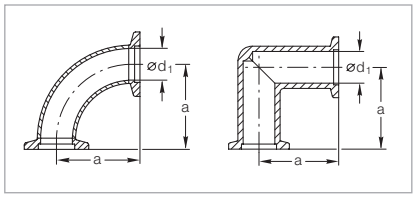

Dimensional drawings for the pipe bends 90° (stainless steel, left)
and the mitred elbows 90° (aluminium, right)

Technical Data

DN	ISO-KF	16	16	25	25	40	40	50
a	mm (in.)	40 (1.57)	40 (1.57)	50 (1.97)	50 (1.97)	65 (2.56)	65 (2.56)	70 (2.76)
d_1	mm (in.)	16 (0.63)	15 (0.59)	25 (0.98)	25 (0.98)	41 (1.62)	41 (1.62)	49 (1.93)
Conductance	l/s	6.5	–	18.9	–	56.5	–	–

Ordering Information

Aluminium	Part No.	**184 36**	**–**	**184 37**	**–**	**184 38**	**–**	**–**
Stainless steel	Part No.	**–**	**884 61**	**–**	**884 62**	**–**	**88464**	**884 65**

Not suited for the mounting of turbo molecular pumps

Important: In the table of Chapter "General" the German designation for the type of steel is also stated in accordance with AISI.

Tees (Aluminium 3.2315.08 / Stainless Steel 1.4301)

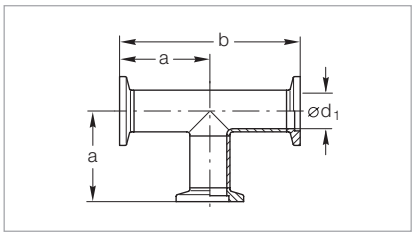

Dimensional drawing for the tees

Technical Data

DN	ISO-KF	16	16	25	25	40	40	50
a	mm (in.)	40 (1.57)	40 (1.57)	50 (1.97)	50 (1.97)	65 (2.56)	65 (2.56)	70 (2.76)
b	mm (in.)	80 (3.15)	80 (3.15)	100 (3.94)	100 (3.94)	130 (5.12)	130 (5.12)	140 (5.51)
d_1 (Aluminium)	mm (in.)	6 (0.63)	–	25 (0.98)	–)	39 (1.54)	–)	–
d_1 (Stainless steel)	mm (in.)	–	16 (0.63)	–	25 (0.98)	–)	41 (1.61)	53 (2.09)
Conductance	l/s	6,5	–	18,9	–	56,5	–	–

Ordering Information

Aluminium	Part No.	**184 06**	**–**	**184 07**	**–**	**184 08**	**–**	**–**
Stainless steel	Part No.	**–**	**884 71**	**–**	**884 72**	**–**	**884 74**	**884 75**

Not suited for the mounting of turbo molecular pumps

4-Way Crosses (Aluminium 3.2315.08 / Stainless Steel 1.4301)

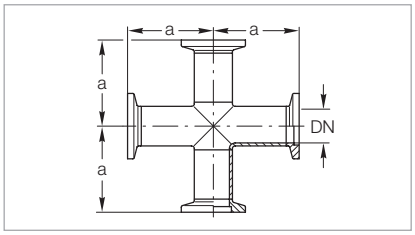

Dimensional drawing for the 4-way crosses

Technical Data

DN	ISO-KF	16	16	25	25	40	40	50
a	mm (in.)	40 (1.57)	40 (1.57)	50 (1.97)	50 (1.97)	65 (2.56)	65 (2.56)	70 (2.76)
Conductance	l/s	6,5	–	18,9	–	56,5	–	–

Ordering Information

Aluminium	Part No.	**184 71**	**–**	**184 74**	**–**	**184 75**	**–**	**–**
Stainless steel	Part No.	**–**	**884 85**	**–**	**884 86**	**–**	**884 87**	**884 88**

Not suited for the mounting of turbo molecular pumps

Important: In the table of Chapter “General” the German designation for the type of steel is also stated in accordance with AISI.

4-Way Reducer Crosses with lateral DN 16 Flanges (Aluminium 3.2315.08 / Stainless Steel 1.4301)

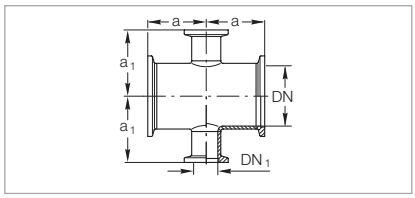

Dimensional drawing for the 4-way reducer crosses with lateral DN 16 flanges

Technical Data

DN/DN$_1$	ISO-KF	25/16	40/16	50/16
a	mm (in.)	35 (1.38)	40 (1.57)	50 (1.97)
a$_1$	mm (in.)	35 (1.38)	45 (1.77)	50 (1.97)

Ordering Information

Aluminium	Part No.	**184 57**	**184 58**	**–**
Stainless steel	Part No.	**884 96**	**884 97**	**884 98**

Not suited for the mounting of turbo molecular pumps

Adaptors/Reducers ISO-KF – ISO-K

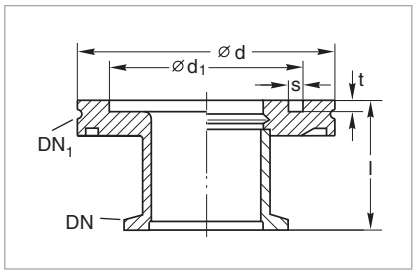

Dimensional drawing for the adaptor reducers ISO-KF – ISO-K;
left: aluminium; right: stainless steel

Technical Data

DN	ISO-KF	40	50	40
DN$_1$	ISO-K	63	63	100
d	mm (in.)	95 (3.74)	95 (3.74)	130 (5.12)
d$_1$	mm (in.)	70 (2.76)	70 (2.76)	102 (4.02)
l	mm (in.)	40 (1.57)	45 (1.77)	40 (1.57)
s	mm (in.)	5 (0.2)	5 (0.2)	5 (0.2)
t	mm (in.)	4.5 (0.18)	4.5 (0.18)	4.5 (0.18)
Weight	kg (lbs)	0.5 (1.10)	0.6 (1.32)	0.8 (1.77)

Ordering Information

Stainless steel 1.4305	Part No.	**887 40**	**887 41**	**887 42**
Aluminium 3.2315.71	Part No.	**269 40**	**269 41**	**–**

Important: In the table of Chapter “General” the German designation for the type of steel is also stated in accordance with AISI.

Adaptors ISO-KF – CF (Stainless Steel 1.4301)

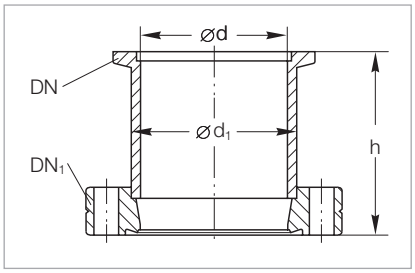

Dimensional drawing for the adaptors CF – ISO-KF

Technical Data

DN	**ISO-KF**	16	25	16	25	40	40
DN_1	**CF**	16	16	40	40	40	63
d	**mm (in.)**	16	16	16	26	37	41
h	**mm (in.)**	35	35	30	30	50	35
d_1 (tube)	**mm (in.)**	20	20	20	30	41	45

Ordering Information

Stainless steel 1.4301	Part No.	**837 81**	**837 83**	**837 82**	**837 84**	**837 36**	**837 86**

Screw-on Flanges (Stainless Steel 1.4305 / FPM (FKM))

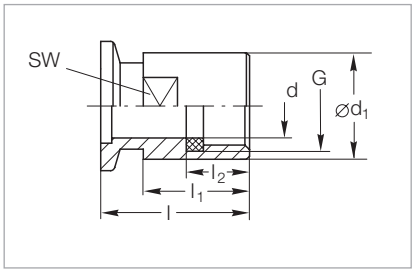

Dimensional drawing for the screw-on flanges

Technical Data

DN	**ISO-KF**	10	16	25	40
l	**mm (in.)**	35 (1.34)	35 (1.34)	45 (1.77)	50 (1.97)
l_1	**mm (in.)**	25 (0.98)	25 (0.98)	35 (1.34)	40 (1.57)
l_2	**mm (in.)**	15 (0.59)	15 (0.59)	25 (0.98)	30 (1.18)
d	**mm (in.)**	10 (0.39)	15 (0.59)	24 (0.94)	38 (1.50)
d_1	**mm (in.)**	20 (0.79)	25 (0.98)	39 (1.54)	54 (2.13)
G (according to DIN ISO 228-1)		G 3/8	G 1/2	G 1	G 1 1/2
SW (width across flats)	**mm (in.)**	17 (0.67)	21 (0.83)	36 (1.42)	50 (1.97)

Ordering Information

Stainless steel	Part No.	**884 25**	**884 26**	**884 27**	**884 28**

Important: In the table of Chapter "General" the German designation for the type of steel is also stated in accordance with AISI.

Screw-in Flanges (Stainless Steel 1.4301 / FPM (FKM))

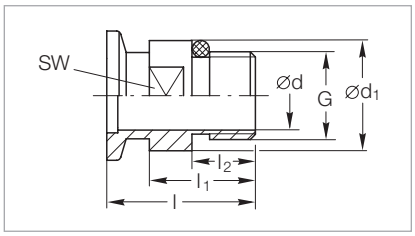

Dimensional drawing for the screw-in flanges

Technical Data

DN	ISO-KF	10	16	16	16	25	40
l	mm (in.)	35 (1.34)	26 (1.02)	35 (1.34)	42 (1.65)	45 (1.77)	50 (1.97)
l_1	mm (in.)	25 (0.98)	–	25 (0.98)	–	35 (1.34)	40 (1.57)
l_2	mm (in.)	15 (0.59)	8 (0.31)	15 (0.59)	11,5 (0.45)	25 (0.98)	30 (1.18)
d	mm (in.)	12 (0.47)	5 (0.20)	16 (0.63)	5 (0.20)	25 (0.98)	41 (1.61)
d_1	mm (in.)	22 (0.87)	16 (0.63)	26 (1.02)	–	39 (1.54)	54 (2.13)
M	mm (in.)	– –	– –	– –	M 16 x 1,5 (M 16 x 0.06)	– –	– –
G (according to DIN ISO 228-1)		G 3/8	G 1/8	G 1/2		G 1	G 1 1/2
SW (width across flats)	mm (in.)	19 (0.75)	13 (0.51)	22 (0.87)	17 (0.67)	36 (1.42)	50 (1.97)

Ordering Information

Stainless steel 1.4301	Part No.	**886 30**	**160 26**	**886 31**	**16840V01**	**886 32**	**886 33**

ISO-KF Flanges with Hose Nozzles (Al AW-6082-T6 and Stainless Steel 1.4305)

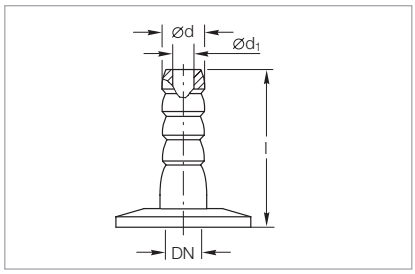

Dimensional drawing for the ISO-KF flanges with hose nozzle

Technical Data

DN	ISO-KF	16	25	40
d	mm (in.)	12 (0.47)	12 (0.47)	12 (0.47)
d_1 [1]	mm (in.)	7 (0.26)	7 (0.26)	7 (0.26)
d_1 [1]	mm (in.)	40 (1.57)	40 (1.57)	40 (1.57)

Ordering Information

Aluminium	Part No.	**182 90**	**182 91**	**182 92**
Stainless steel	Part No.	**885 14**	**885 08**	**885 09**

[1] Also recommended inside diameter for the hose

Important: In the table of Chapter "General" the German designation for the type of steel is also stated in accordance with AISI.

Rubber Vacuum Hoses (NR) for Hose Nozzles

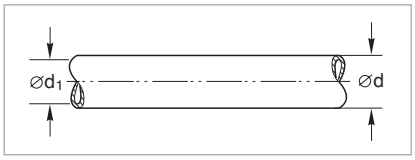

Dimensional drawing for rubber vacuum hoses

Technical Data

DN	ISO-KF	10	16	20
d	mm (in.)	17 (0.66)	25 (0.98)	32 (1.26)
d_1	mm (in.)	7 (0.28)	10 (0.39)	16 (0.63)
Length	m (in.)	by the metre	by the metre	by the metre
Hardness – Shore A –		55 ±5	55 ±5	55 ±5
Temperature range	°C (°F)	-30 to +85 (-22 to +185)	-30 to +85 (-22 to +185)	-30 to +85 (-22 to +185)

Ordering Information

Rubber vacuum hose	Part No.	**172 02**	**172 03**	**172 04**

PVC Coiled Vacuum Hoses without Flanges

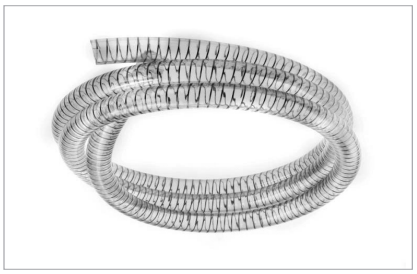

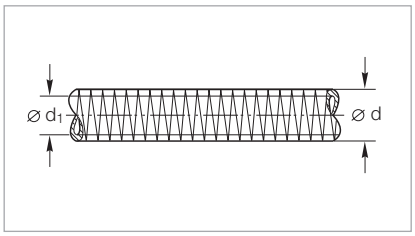

Dimensional drawing for the PVC vacuum hoses

Technical Data

DN	ISO-KF	16	25	40
d	mm (in.)	23 (0.91)	33 (1.30)	53 (2.09)
d_1	mm (in.)	16 (0.63)	25 (0.98)	40 (1.57)
Length	m (in.)	by the metre	by the metre	by the metre

Ordering Information

PVC coiled vacuum hose	Part No.	**172 41**	**172 42**	**172 43**

ISO-KF Flanges with Hose Nozzle (Aluminium AW-6082-T6)

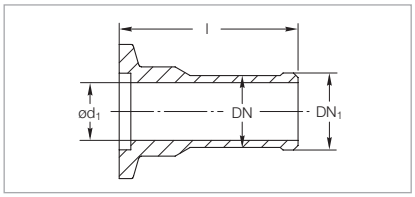

Dimensional drawing for the ISO-KF flanges with hose nozzle

Technical Data

DN	ISO-KF	16	25	40
DN_1 (tube)	mm (in.)	17 (0.67)	26 (1.02)	41 (1.61)
d_1	mm (in.)	13 (0.51)	22 (0.87)	37 (1.46)
l	mm (in.)	40 (1.57)	40 (1.57)	40 (1.57)

Ordering Information

Aluminium	Part No.	**182 45**	**182 46**	**182 47**

Important: In the table of Chapter "General" the German designation for the type of steel is also stated in accordance with AISI.

Elbows 90° with Hose Nozzle (Aluminium 3.2381.02)

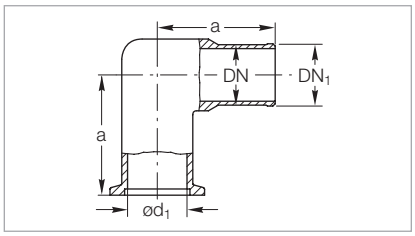

Dimensional drawing for the elbows 90° with hose nozzle

Technical Data

DN	ISO-KF	16	25	40
DN_1 (Tube)	mm (in.)	17 (0.67)	26 (1.02)	41 (1.61)
a	mm (in.)	40 (1.57)	50 (1.97)	65 (2.56)
d_1	mm (in.)	16 (0.63)	25 (0.98)	39 (1.54)

Ordering Information

Aluminium	Part No.	**182 15**	**182 16**	**182 17**

CR Compensation Elements with Integrated Support Ring

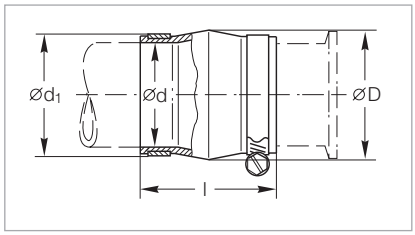

Dimensional drawing for the compensation elements with integrated support ring

Technical Data

DN	ISO-KF	16	25	40
D	mm (in.)	44 (1.73)	50 (1.97)	68 (2.68)
d (Tube tolerance)	mm (in.)	16 (0.63)	25 (0.98)	40 (1.57)
d_1	mm (in.)	24 (0.94)	33 (1.30)	48 (1.89)
l	mm (in.)	58 (2.28)	60 (2.36)	64 (2.52)
Leak rate	mbar x l x s^{-1}	$\leq 1 \times 10^{-5}$	$\leq 1 \times 10^{-5}$	$\leq 1 \times 10^{-5}$

Ordering Information

Stainless steel/CR	Part No.	**182 78** [1)]	**182 79** [1)]	**182 80** [1]

[1)] Is supplied complete with stainless steel hose clamps

Important: In the table of Chapter "General" the German designation for the type of steel is also stated in accordance with AISI.

Hose Clamps (Stainless Steel 1.4301)

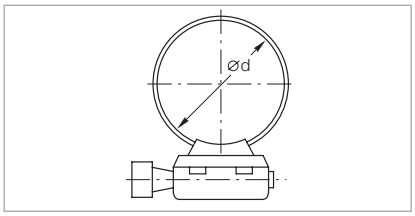

Dimensional drawing for the hose clamps

Technical Data

DN	ISO-KF	16	25	40
d (min. / max.)	mm	13 / 32 (0.51 / 1.26)	19 / 44 (0.75 / 1.73)	29 / 76 (1.14 / 2.99)

Ordering Information

Stainless steel	Part No.	**866 21**	**866 22**	**866 23**

Bellows (Stainless Steel 1.4571) with Flanges (Stainless Steel 1.4301)

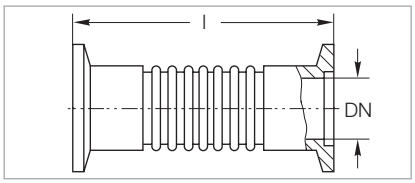

Dimensional drawing for the bellows with flanges

Technical Data

DN	ISO-KF	16	25	40	50
l	mm (in.)	70 (2.76)	80 (3.15)	100 (3.94)	100 (3.94)
Wall thickness	mm (in.)	0.13 (0.005)	0.13 (0.005)	0,15 (0.006)	0,2 (0.008)
Compression	mm (in.)	6.5 (0.26)	8 (0.31)	11 (0.43)	10 (0.39)
Tension	mm (in.)	4 (0.16)	5 (0.20)	7 (0.28)	6 (0.24)
max. angle	degrees [1]	±21	±17	±15	±15
Lateral motion	mm (in.)	±4 (±0.16)	±3,5 (±0.14)	±7 (±0.28)	±8 (±0.31)

Ordering Information

Stainless steel	Part No.	**872 41**	**872 43**	**872 45**	**872 46**

[1] When utilizing the maximum bending angle, no extension along the axial axis will be possible!

Vacuum Hoses [1] with Flanges (Stainless Steel 1.4571)

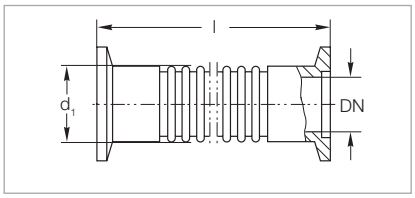

Dimensional drawing for the vacuum hoses with flanges

Technical Data

DN	ISO-KF	16	25	40	50
d_1	mm (in.)	22.8 (0.90)	33 (1.30)	52 (2.05)	63 (2.48)
Max. bending radius (inside)					
with multiple bending	mm (in.)	68.5 (2.70)	103 (4.06)	129 (5.08)	198 (7.80)
with single bend	mm (in.)	50 (1.97)	63 (2.48)	100 (3.94)	130 (5.12)
Wall thickness	mm (in.)	0.2 (0.008)	0.2 (0.008)	0.2 (0.008)	0.3 (0.012)

Ordering Information

l = 250 mm (9.84 in.)	Part No.	**867 81**	**867 83**	**867 85**	**867 86**
l = 500 mm (19.69 in.)	Part No.	**867 91**	**867 93**	**867 95**	**867 96**
l = 750 mm (29.53 in.)	Part No.	**867 41**	**867 43**	**867 45**	**867 46**
l = 1000 mm (39.37 in.)	Part No.	**868 01**	**868 03**	**868 05**	**868 06**

[1] Flexible vacuum hoses must be linked to an external mechanical assembly

Important: In the table of Chapter "General" the German designation for the type of steel is also stated in accordance with AISI.

ISO-KF Flanges with Compression Fitting for Glass/Metal/Plastic Tubes (Aluminium 3.2315.71/FPM(FKM))

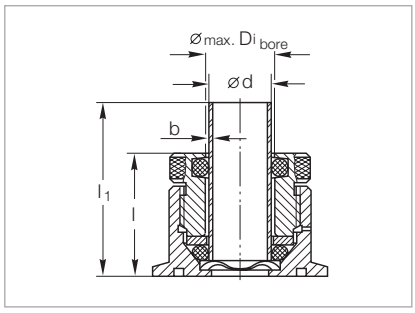

Dimensional drawing for the ISO-KF flanges with compression fitting

Only for pressure ≤ 1000 mbar (≤ 750 Torr)

Technical Data

DN	ISO-KF	10	40
b	mm (in.)	1.5 (0.06)	1.5 (0.06)
d (glass)	mm (in.)	10 (0.39)	26 (1.02)
l	mm (in.)	30 (1.18)	45 (1.77)
l_1	mm (in.)	50 (1.97)	65 (2.56)
Di_{bore}-max.	±0.2 mm (±0.008 in.)	11 (0.43)	27 (1.06)

Ordering Information

Compression fitting	Part No.	**184 61**	**184 66**
Sealing set (FPM (FKM)) for high temperatures (150 °C (302 °F)) (set = 10 pcs)	Part No.	**ES 105 94**	**ES 210 610**

ISO-KF Flanges with Ground Cone (Stainless Steel 1.4301)

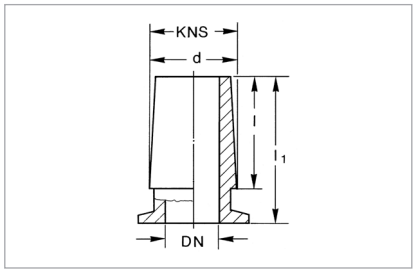

Dimensional drawing for the ISO-KF flanges with ground cone

Technical Data

DN	ISO-KF	16	25	40
KNS - d / l	mm (in.)	19 / 26 (0.75 / 1.02)	29 / 32 (1.14 / 1.26)	45 / 40 (1.77 / 1.57)
l_1	mm (in.)	40 (1.57)	45 (1.77)	55 (2.17)
Taper		1:10	1:10	1:10

Ordering Information

Stainless steel	Part No.	**184 87**	**184 85**	**184 86**

Important: In the table of Chapter “General” the German designation for the type of steel is also stated in accordance with AISI.

Only available for purchase in North and South America

ISO-KF Flanges with Long Weld Stub, Standard-Inch Diameters

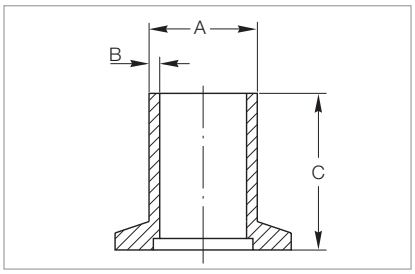

Dimensional drawing for the ISO-KF flanges with long weld stub

Technical Data

DN	ISO-KF	16	25	40
ø A	mm (in.)	19.0 (0.75)	25.4 (1.00)	38.1 (1.50)
B	mm (in.)	1.7 (0.07)	1.7 (0.07)	2.1 (0.08)
C	mm (in.)	40.0 (1.58)	40.0 (1.58)	40.0 (1.58)
Tube fitting O.D. size		3/4"	1"	1 1/2"

Ordering Information

Stainless steel	Part No.	**899 621**	**899 622**	**899 624**

ISO-KF Flanges with Weld Stub, Metric Diameters

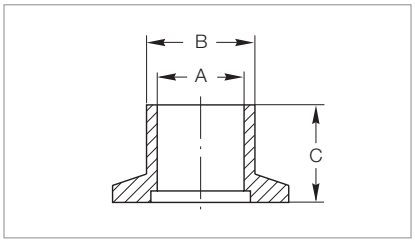

Dimensional drawing for the ISO-KF flanges with weld stub

Technical Data

DN	ISO-KF	16	25	40	50
ø A	mm (in.)	16 (0.63)	25 (0.98)	40 (1.58)	50 (1.97)
B	mm (in.)	20 (0.79)	28 (1.10)	45 (1.77)	55 (2.17)
C	mm (in.)	16 (0.63)	19 (0.75)	25 (0.98)	25 (0.98)

Ordering Information

Stainless steel	Part No.	**884 21**	**884 22**	**884 23**	**883 85**

Important: In the table of Chapter “General” the German designation for the type of steel is also stated in accordance with AISI.

Only available for purchase in North and South America

ISO-KF Flanges with Weld Neck, Metric Diameters

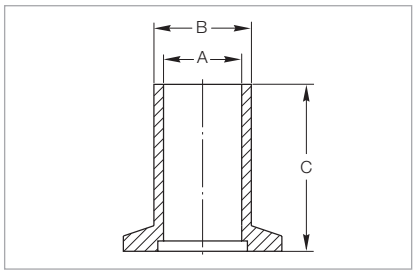

Dimensional drawing for the ISO-KF flanges with weld neck

Technical Data

DN	ISO-KF	16	25	40
ø A	mm (in.)	16 (0.63)	25 (0.98)	40 (1.58)
B	mm (in.)	20 (0.79)	28 (1.10)	45 (1.77)
C	mm (in.)	57 (2.25)	57 (2.25)	57 (2.25)

Ordering Information

Stainless steel	Part No.	**884 31**	**884 32**	**884 33**

Important: In the table of Chapter “General” the German designation for the type of steel is also stated in accordance with AISI.

Only available for purchase in North and South America

ISO-KF Flanges for Tube Fittings, Male

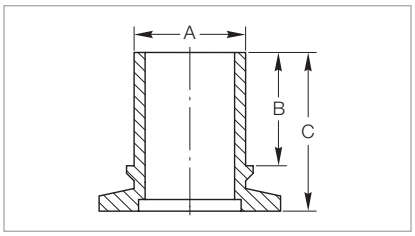

Dimensional drawing for the ISO-KF flanges for tube fittings, male

Technical Data

DN	ISO-KF	16	25	40
ø A	mm (in.)	19.0 (0.75)	29.0 (1.13)	41.0 (1.63)
B	mm (in.)	17.5 (0.69)	29.0 (1.13)	29.0 (1.13)
C	mm (in.)	29.0 (1.13)	35.0 (1.38)	46.0 (1.81)
Tube fitting I.D. size		3/4"	1 1/8"	1 5/8"

Ordering Information

Brass	Part No.	**910280119**	**910280120**	**910280121**

ISO-KF Flanges for Tube Fittings, Female

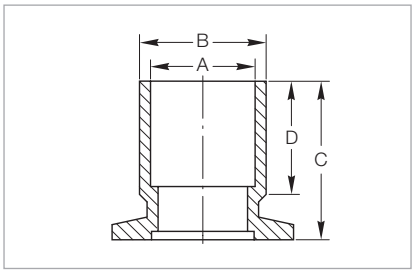

Dimensional drawing for the ISO-KF flanges for tube fittings, female

Technical Data

DN	ISO-KF	40	40
ø A	mm (in.)	54.0 (2.13)	41.0 (1.63)
ø B	mm (in.)	57.0 (2.24)	44.5 (1.75)
C	mm (in.)	35.0 (1.38)	35.0 (1.38)
D	mm (in.)	16.0 (0.63)	19.0 (0.75)
Tube fitting O.D. size		2 1/8"	1 5/8"

Ordering Information

Brass	Part No.	**910280124**	**910280125**

Important: In the table of Chapter “General” the German designation for the type of steel is also stated in accordance with AISI.

Only available for purchase in North and South America

ISO-KF/NPT Female Adaptor

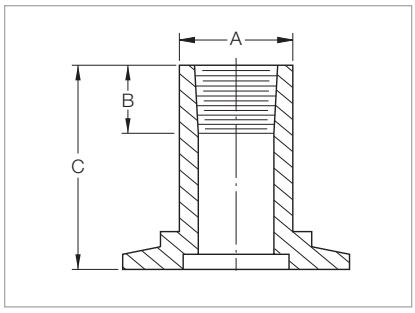

Dimensional drawing
for the ISO-KF/NPT female adaptors

Technical Data

DN	ISO-KF	16		25		40	
ø A	mm (in.)	16 (0.62)		25 (1.00)		38 (1.50)	
B	mm (in.)	10 (0.39)		10 (0.39)		10 (0.39)	
C	mm (in.)	25.4 (1.00)		25.4 (1.00)		25.4 (1.00)	
Pipe size	NPT	1/8"	1/4"	1/8"	1/4"	1/8"	1/4"

Ordering Information

Stainless steel	Part No.	**899 604**	**899 643**	**899 605**	**899 644**	**899 606**	**899 645**

ISO-KF/NPT Male Adaptor

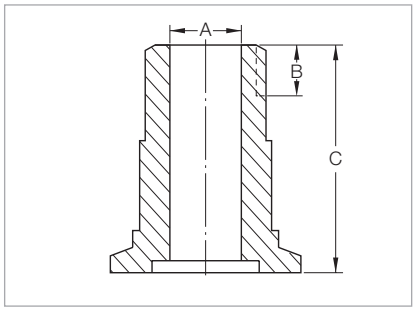

Dimensional drawing
for the ISO-KF/NPT male adaptors

Technical Data

DN	ISO-KF	16	25	25
ø A	mm (in.)	9.5 (0.38)	16 (0.63)	23.8 (0.94)
B	mm (in.)	10 (0.4)	13.5 (0.53)	17 (0.68)
C	mm (in.)	38 (1.5)	46 (1.81)	63.5 (2.50)
Pipe size	NPT	1/4"	1/2"	1"

Ordering Information

Carbon steel	Part No.	**899 601**	**899 602**	**899 626**
Stainless steel	Part No.	**992780678**	**–**	**–**

Technical Data

DN	ISO-KF	40	40	40	40
ø A	mm (in.)	25.4 (1.00)	31.8 (1.25)	38.1 (1.50)	38.2 (1.50
B	mm (in.)	17.0 (0.68)	18.0 (0.71)	18.4 (0.72)	19.2 (0.76)
C	mm (in.)	50.8 (2.00)	63.5 (2.50)	63.5 (2.50)	63.5 (2.50)
Pipe size	NPT	1"	1 1/4"	1 1/2"	2"

Ordering Information

Stainless steel	Part No.	**899 603**	**899 627**	**899 628**	**899 629**

Important: In the table of Chapter "General" the German designation for the type of steel is also stated in accordance with AISI.

Only available for purchase in North and South America

ISO-KF/Metric Adaptor

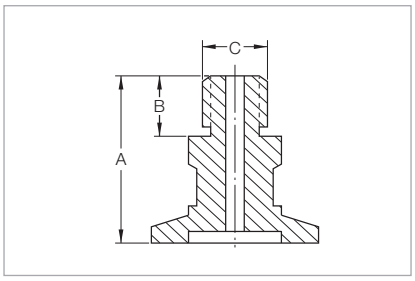

Dimensional drawing for the ISO-KF/ metric adaptors

Technical Data

DN	ISO-KF	16
A	mm (in.)	50.8 (2.00)
B	mm (in.)	12.7 (0.50)
ø C / thread	mm (in.)	M 16 x 1.5 (M 16 x 0.06)

Ordering Information

Carbon steel	Part No.	**99258004**

Hose Adaptor

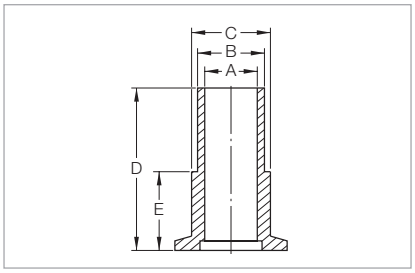

Dimensional drawing for the hose adaptors

Technical Data

DN	ISO-KF	16	25	40
ø A	mm (in.)	16 (0.63)	21 (0.81)	32 (1.2
ø B	mm (in.)	19.5 (0.77)	26 (1.02)	39 (1.54)
ø C	mm (in.)	20 (0.79)	28 (1.10)	45 (1.77)
D	mm (in.)	29 (1.13)	29 (1.13)	29 (1.13)
E	mm (in.)	13 (0.50)	13 (0.50)	13 (0.50)
Nominal I.D. hose		3/4"	1"	1 1/2"

Ordering Information

Stainless steel	Part No.	**992780668**	**992780670**	**992780672**

Important: In the table of Chapter “General” the German designation for the type of steel is also stated in accordance with AISI.

Only available for purchase in North and South America

ISO-KF Nipples, American Standard

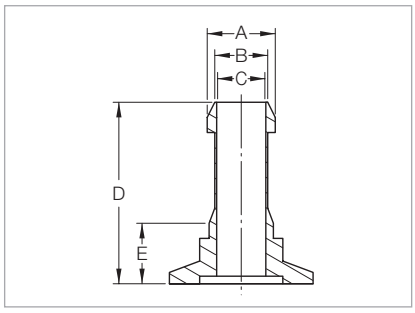

Dimensional drawing for the ISO-KF nipples american standard

Technical Data

DN	ISO-KF	16	16	25
ø A	mm (in.)	9.5 (0.38)	16.1 (0.64)	16.1 (0.64)
ø B	mm (in.)	7.6 (0.30)	14.3 (0.56)	14.3 (0.56)
ø C	mm (in.)	5.6 (0.22)	11.9 (0.47)	11.9 (0.47)
D	mm (in.)	40 (1.58)	40 (1.58)	40 (1.58)
E	mm (in.)	12.7 (0.50)	12.7 (0.50)	12.7 (0.50)
Tube fitting O.D. size		1/4"	1/2"	1/2"

Ordering Information

Stainless steel	Part No.	**899 674**	**899 675**	**899 676**

Flanges with Welded Socket

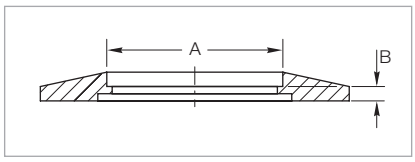

Dimensional drawing for the flanges with welded sockets

Technical Data

DN	ISO-KF	40
ø A	mm (in.)	41.1 (1.62)
B	mm (in.)	3 (0.12)
Tube fitting O.D. size		1 1/2"

Ordering Information

Stainless steel	Part No.	**899 634**

Important: In the table of Chapter “General” the German designation for the type of steel is also stated in accordance with AISI.

Notes

ISO-K
Clamp Flange Fittings and Components

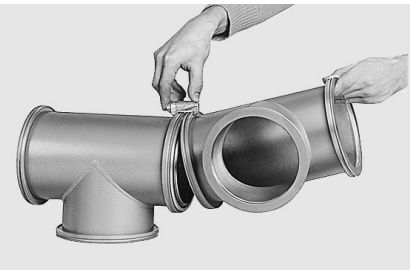

Attaching a clamp flange component and fitting of the clamp

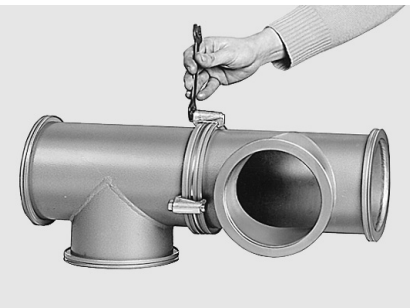

Tightening the clamping bolt

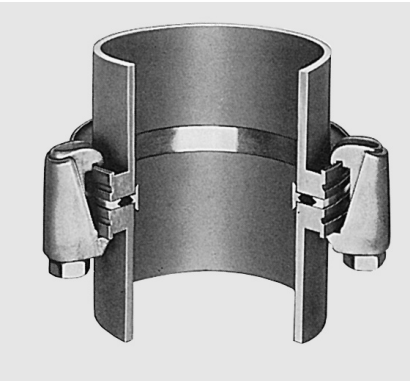

ISO-K clamp flange connection

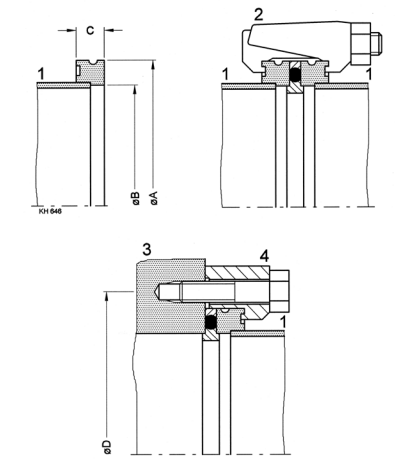

1 Clamp flange
2 Claw
3 Base plate
4 Claw

Flange Components DN 63 to DN 630 ISO-K (to DIN 28 404 in line with ISO 1609/3669)

The clamp flange connection was introduced to the vacuum industry by Leybold. Since the fitting of clamp flanges does not de-pend on any bolt holes in the flange, these components may be installed in any orientation.

Advantages to the User

- Quick to fit
- Safe and reliable
- Can be turned in any direction
- Easy to disassemble, thus easy to clean
- Suitable for pressures down to 10^{-7} mbar (0.75 x 10^{-7} Torr) when using O-rings and down to 10^{-9} mbar (0.75 x 10^{-9} Torr) when using metal gaskets
- Easily adaptable to other flange systems
- Mounted by means of clamps (ISO-K) or collar flange with retaining ring (ISO-F, DIN EN 1092-1)
- Clamp flange components are used with CR or FPM (FKM) gaskets or with ultra sealing disks made of aluminium
- Degassing temperatures

  for CR, max. 100 °C (212 °F)
  for FPM (FKM), max. 150 °C (302 °F)
  for the ultra sealing disk, max. 200 °C (392 °F)

The pressure range for the application depends in each case on the sealing method which is used and is thus limited for ultra sealing disks to 10^{-9} mbar (0.75 x 10^{-9} Torr), for FPM (FKM) gaskets to 10^{-8} mbar (0.75 x 10^{-8} Torr) and for CR sealed components to 10^{-7} mbar (0.75 x 10^{-7} Torr).

Flexible Compensation Elements (CR)

Vacuum systems and pump systems often require components which are capable of protecting sensitive instruments against impacts or excessive vibrations while linking tubes at the same time.

Advantages to the User

- Easy and quick to install
- Safe and reliable
- Tubes may be turned in any direction
- No centering ring and sealing ring is needed since the seal is provided by the smooth tube surface
- Capable of withstanding temperatures up to 100 °C (212 °F)
- Suitable for pressures down to 10^{-5} mbar (0.75 x 10^{-5} Torr)

Technical Data

Nominal diameter		A	B	C	Number of clamps	D	Screws for claws	Number of claws
DN 63 ISO-K	mm	95	70	12	4	110	M 8 x 35	4
	in.	3.74	2.76	0.47		4.33	M 8 x 1.38	
DN 100 ISO-K	mm	130	102	12	4	145	M 8 x 35	8
	in.	5.12	4.02	0.47		5.71	M 8 x 1.38	
DN 160 ISO-K	mm	180	153	12	4	200	M 10 x 35	8
	in.	7.09	6.02	0.47		7.87	M 10 x 1.38	
DN 200 ISO-K	mm	240	213	12	6	260	M 10 x 35	12
	in.	9.45	8.39	0.47		10.24	M 10 x 1.38	
DN 250 ISO-K	mm	290	261	12	6	310	M 10 x 35	12
	in.	11.42	10.28	0.47		12.20	M 10 x 1.38	
DN 320 ISO-K	mm	370	318	17	8	395	M 12 x 50	12
	in.	14.57	12.52	0.67		15.55	M 12 x 1.97	
DN 400 ISO-K	mm	450	400	17	8	480	M 12 x 50	16
	in.	17.72	15.75	0.67		18.90	M 12 x 1.97	
DN 500 ISO-K	mm	550	501	17	12	580	M 12 x 50	16
	in.	21.65	19.72	0.67		22.83	M 12 x 1.97	
DN 630 ISO-K	mm	690	651	22	12	720	M 12 x 55	20
	in.	27.17	25.63	0.87		28.35	M 12 x 2.17	

Important: In the table of Chapter "General" the German designation for the type of steel is also stated in accordance with AISI.

Centering Rings (Aluminium AW-6082-T6 / Stainless Steel 1.4301) with O-Ring (CR/FPM (FKM))

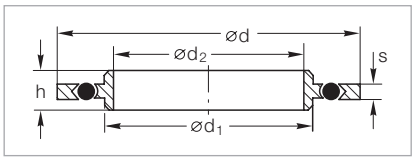

Dimensional drawing for the centering rings with O-ring

Technical Data

DN	ISO-K	63	100	160	200	250
d	mm (in.)	96 (3.78)	128 (5.04)	179 (7.05)	239 (9.41)	287 (11.30)
d_1	mm (in.)	70 (2.76)	102 (4.02)	153 (6.02)	213 (8.39)	261 (10.28)
d_2	mm (in.)	67 (2.64)	99 (3.90)	150 (5.91)	210 (8.27)	258 (10.16)
h	mm (in.)	8 (0.31)	8 (0.31)	8 (0.31)	8 (0.31)	8 (0.31)
s	mm (in.)	3.9 (0.15)	3.9 (0.15)	3.9 (0.15)	3.9 (0.15)	3.9 (0.15)

Ordering Information

Aluminium/FPM (FKM)	Part No.	**268 41**	**268 42**	**268 43**	**268 44**	**268 45**
Aluminium/CR	Part No.	**268 05**	**268 06**	**268 09**	**268 19**	**268 17**
Stainless steel/FPM (FKM) [1]	Part No.	**887 03**	**887 04**	**887 07**	**887 02**	**887 08**

Technical Data

DN	ISO-K	320	400	500	630	800	1000
d	mm (in.)	358 (14.09)	440 (17.32)	541 (21.30)	691 (27.20)	840 (33.07)	1040 (40.94)
d_1	mm (in.)	318 (12.52)	400 (15.75)	501 (19.72)	651 (25.63)	800 (31.50)	1000 (39.37)
d_2	mm (in.)	313 (12.32)	395 (15.55)	496 (19.53)	646 (25.43)	795 (31.18)	995 (39.17)
h	mm (in.)	14 (0.55)	14 (0.55)	14 (0.55)	14 (0.55)	14 (0.55)	14 (0.55)
s	mm (in.)	5.6 (0.22)	5.6 (0.22)	5.6 (0.22)	5.6 (0.22)	5.6 (0.22)	5.6 (0.22)

Ordering Information

Aluminium/FPM (FKM)	Part No.	**268 46**	**268 47**	**268 48**	**268 49**	**268 50**	**268 51**
Aluminium/CR	Part No.	**268 18**	**268 14**	**268 15**	**268 16**	**–**	**–**

[1] Inner ring: stainless steel, outer ring: aluminium

Centering Rings with Fine Filter (Stainless Steel 1.4301) and O-Ring (FPM (FKM))

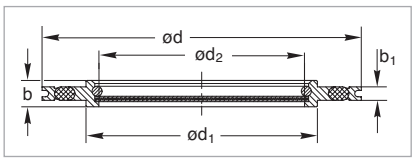

Dimensional drawing for the centering rings with fine filter

Filter
material: Stainless steel 1.4404,
size of pores: 4 µm,
separation grade: 1 µm particles to 98%

Technical Data

DN	ISO-K	63	100
b	mm (in.)	8 (0.31)	8 (0.31)
b_1	mm (in.)	4 (0.16)	4 (0.16)
d	mm (in.)	96 (3.78)	128 (5.04)
d_1	mm (in.)	70 (2.76)	102 (4.02)
d_2	mm (in.)	62 (2.44)	94 (3.7)

Ordering Information

Stainless steel	Part No.	**887 20**	**887 21**

Important: In the table of Chapter "General" the German designation for the type of steel is also stated in accordance with AISI.

Centering Ring Adaptors (Aluminium) with O-Ring (FPM (FKM)), ISO-K to LF Standard

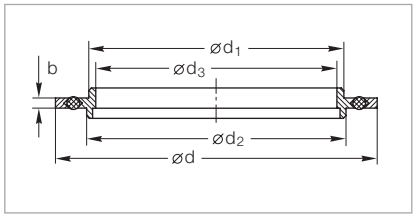

Dimensional drawing for the centering ring adaptors with O-ring

Technical Data

DN	ISO-K / LF	100 / 100	160 / 150	250 / 250
b	mm (in.)	4 (0.16)	4 (0.16)	4 (0.16)
d	mm (in.)	126 (4.96)	177 (6.97)	286 (11.26)
d_1	mm (in.)	100 (3.94)	150 (5.91)	250 (9.84)
d_2	mm (in.)	102 (4.02)	153 (6.02)	261 (10.28)
d_3	mm (in.)	95 (3.74)	145 (5.71)	244 (9.61)

Ordering Information

Aluminium/FPM (FKM)	Part No.	**105 25**	**105 35**	**105 45**

O-Ring Gaskets for Clamp Flange Fittings

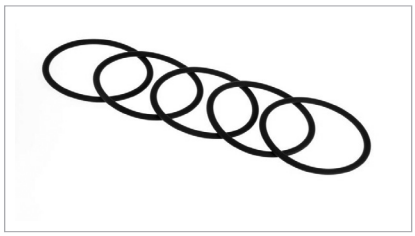

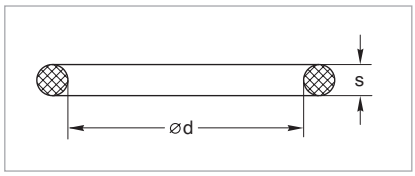

Dimensional drawing for the spare O-ring for clamp flange fittings

Technical Data

DN	ISO-K	63	100	160	200	250	320
d	mm (in.)	75 (2.95)	107 (4.21)	158 (6.22)	208 (8.19)	253 (9.96)	329 (12.95)
s	mm (in.)	5 (0.20)	5 (0.20)	5 (0.20)	5 (0.20)	5 (0.20)	7 (0.28)
Quantity per set		5	5	5	5	5	1

Ordering Information

FPM (FKM)	Part No.	**ES210635**	**ES210645**	**ES210650**	**ES210655**	**ES210660**	**E210665**

Technical Data

DN	ISO-K	400	500
d	mm (in.)	405 (15.94)	506 (19.92)
s	mm (in.)	7 (0.28)	7 (0.28)
Quantity per set		1	1

Ordering Information

(FKM)	Part No.	**E210670**	**E210675**

Important: In the table of Chapter “General” the German designation for the type of steel is also stated in accordance with AISI.

Ultra Sealing Disks (Aluminium 3.2315.70) [1)]

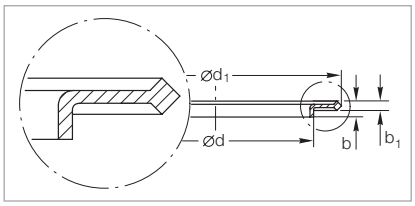

Dimensional drawing for the ultra sealing disks

Technical Data

DN	ISO-K / ISO-F	63	100	160	250
b	mm (in.)	4.5 (0.18)	4.5 (0.18)	4.5 (0.18)	4.5 (0.18)
b_1	mm (in.)	2.6 (0.10)	2.6 (0.10)	2.6 (0.10)	2.6 (0.10)
d	mm (in.)	69.8 (2.75)	101.8 (4.01)	152.8 (6.02)	260.8 (10.27)
d_1	mm (in.)	85.6 (3.37)	116.6 (4.59)	166.6 (6.56)	276.6 (10.89)

Ordering Information

Aluminium	Part No.	**886 24**	**886 25**	**886 26**	**886 27**

[1)] Only for collar ring connections

Clamps for ISO-K

Clamps for ISO-K, stainless steel

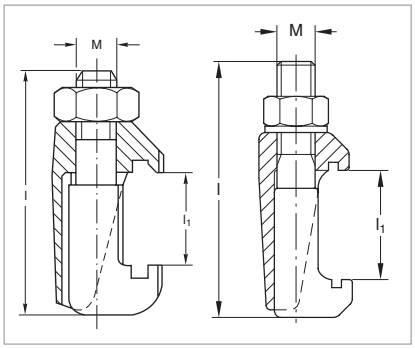

Dimensional drawing for the clamps, right: Part No. 210 061

Exact numbers of clamps see first page of the chapter “(ISO-K) Clamp Flange Fittings and Components”

Technical Data

DN	ISO-K	63 / 250	63 / 250	320 / 500	630	320 / 630
Number of required clamps per connection		4 / 6	4 / 6	8 / 12	12	8 / 12
M	thread	M 10	M 10	M 12	M 12	M 12
l	mm (in.)	61.0 (2.40)	68.0 (2.68)	78.0 (3.07)	88.0 (3.46)	82.5 (3.25)
l_1	mm (in.)	17 to 27 (0.67 to 1.06)	25 to 35 (0.98 to 1.38)	27 to 39 (1.06 to 1.54)	31 to 49 (1.22 to 1.93)	29 to 47 (1.14 to 1.85)

Ordering Information

1 set = 4 clamps						
Galvanized steel 1.1181	Part No.	**267 01**	**267 02**	**267 10**	**267 11**	**–**
Stainless steel 1.4401	Part No.	**887 99**	**–**	**–**	**–**	**210 061**

Important: In the table of Chapter “General” the German designation for the type of steel is also stated in accordance with AISI.

Claws (Galvanized Steel 1.1181) for ISO-K

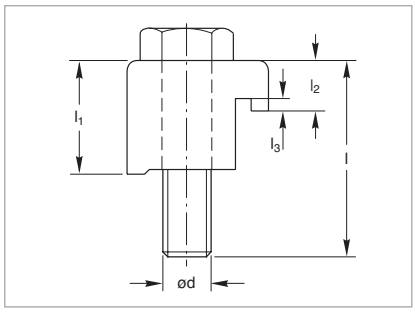

Dimensional drawing for the claws for ISO-K

Exact numbers of clamps see first page of the chapter “(ISO-K) Clamp Flange Fittings and Components”.

Note: These clamps are not suitable for the installation of turbomolecular pumps. Please use the fasteners specified in the operating instruction of the pump.

Technical Data

DN	ISO-K	63 / 100	160 / 250	320 / 500	630
Number of required claws per connection		4 / 8	8 / 12	12 / 16	20
d	thread	M 8	M 10	M 12	M 12
l	mm (in.)	35 (1.38)	35 (1.38)	50 (1.97)	55 (2.17)
l_1	mm (in.)	22.5 (0.89)	23.0 (0.91)	36.5 (1.44)	41.5 (1.63)
l_2	mm (in.)	8.6 (0.34)	9.1 (0.36)	15.9 (0.63)	16 (0.63)
l_3	mm (in.)	2.5 (0.10)	2.5 (0.10)	2.5 (0.10)	2.5 (0.10)

Ordering Information

1 set = 4 claws	Part No.	**268 25**	**268 26**	**268 27**	**268 28**

Claws for Sealing Groove in Base Plate (Galvanized Steel 1.1181) for ISO-K

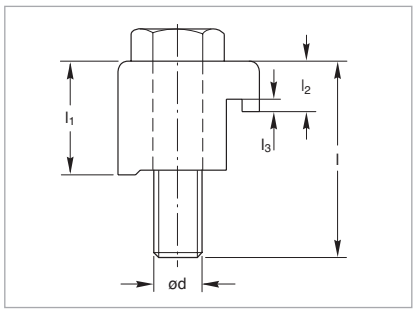

Dimensional drawing for the claws for sealing groove

Exact numbers of clamps see first page of the chapter “(ISO-K) Clamp Flange Fittings and Components”.

Note: These clamps are not suitable for the installation of turbomolecular pumps. Please use the fasteners specified in the operating instruction of the pump.

Technical Data

DN	ISO-K	63 / 100	160 /250	320 / 500
d	thread	M 8	M 10	M 12
l	mm (in.)	30 (1.18)	35 (1.38)	45 (1.77)
l_1	mm (in.)	18.6 (0.73)	19 (0.75)	31 (1.22)
l_2	mm (in.)	8.6 (0.34)	9.0 (0.35)	16.0 (0.63)
l_3	mm (in.)	2.5 (0.10)	2.5 (0.10)	2.5 (0.10)

Ordering Information

1 set = 4 claws	Part No.	**268 76**	**268 77**	**268 78**

Important: In the table of Chapter “General” the German designation for the type of steel is also stated in accordance with AISI.

Blank Flanges (Stainless Steel 1.4301)

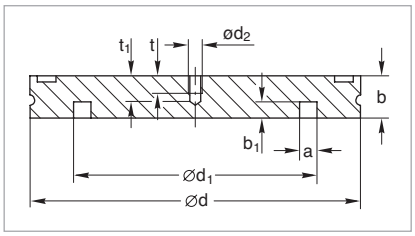

Dimensional drawing for the blank flanges

Technical Data

DN	ISO-K	63	100	160	200	250	320	400	500	630
a	mm	5	5	5	5	5	5	5	5	5
	in.	0.20	0.20	0.20	0.20	0.20	0.20	0.20	0.20	0.20
b	mm	12	12	12	12	12	17	17	17	22
	in.	0.47	0.47	0.47	0.47	0.47	0.67	0.67	0.67	0.87
b_1	mm	4,5	4,5	4,5	4,5	4,5	6,5	6,5	6,5	6,5
	in.	0.18	0.18	0.18	0.18	0.18	0.26	0.26	0.26	0.26
d	mm	95	130	180	240	290	370	450	550	690
	in.	3.74	5.12	7.09	9.45	11.42	14.57	17.72	21.65	27.17
d_1	mm	70	102	153	213	261	318	400	501	651
	in.	2.76	4.02	6.02	8.39	10.28	12.52	15.75	19.72	25.63
d_2	thread	–	–	–	–	–	–	–	M 8	M 8
t	mm	8	8	8	8	8	8	8	8	8
	in.	0.31	0.31	0.31	0.31	0.31	0.31	0.31	0.31	0.31
t_1	mm	12	12	12	12	12	12	12	12	12
	in.	0.47	0.47	0.47	0.47	0.47	0.47	0.47	0.47	0.47

Ordering Information

Stainless steel	Part No.	**88755**	**88756**	**88757**	**88754**	**88758**	**88759**	**88760**	**88761**	**88762**

Welding Flanges

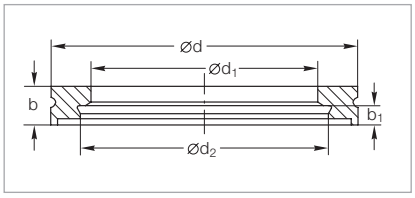

Dimensional drawing for the welding flanges

Technical Data

DN	ISO-K	63	100	160	200	250
b	mm (in.)	12 (0.47)	12 (0.47)	12 (0.47)	12 (0.47)	12 (0.47)
b_1	mm (in.)	6 (0.24)	6 (0.24)	6 (0.24)	6 (0.24)	6 (0.24)
d	mm (in.)	95 (3.74)	130 (5.12)	180 (7.09)	240 (9.45)	290 (11.42)
d_1	mm (in.)	70 (2.76)	102 (4.02)	153 (6.02)	213 (8.39)	261 (10.28)
d_2	mm (in.)	76.6 (3.02)	108.7 (4.28)	159.8 (6.29)	219.8 (8.65)	267.8 (10.54)

Ordering Information

Steel 1.0831	Part No.	**269 61**	**269 62**	**269 63**	**–**	**269 65**
Stainless steel 1.4301	Part No.	**886 61**	**886 62**	**886 63**	**886 64**	**886 65**

Important: In the table of Chapter “General” the German designation for the type of steel is also stated in accordance with AISI.

Clamp Flanges with Tubulation (Steel 1.0831, 1.0308 / Stainless Steel 1.4301)

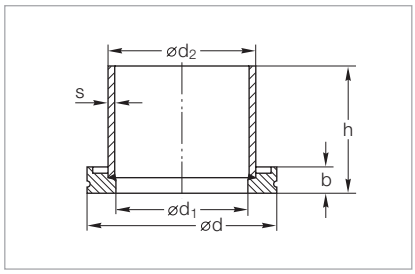

Dimensional drawing for the clamp flanges with tubulation

Technical Data

DN	ISO-K	63	100	160	200	250	320	400	500	630
d	mm	95	130	180	240	290	370	450	550	690
	in.	3.74	5.12	7.09	9.45	11.42	14.57	17.72	21.65	27.17
d_1	mm	70	102	153	213	261	318	400	501	651
	in.	2.76	4.02	6.02	8.39	10.28	12.52	15.75	19.72	25.63
d_2	mm	76,1	108	159	219,1	267	324	406	508	660
	in.	3.00	4.25	6.26	8.63	10.51	12.76	15.98	20.00	25.98
h	mm	100	100	100	100	100	100	100	100	100
	in.	3.94	3.94	3.94	3.94	3.94	3.94	3.94	3.94	3.94
s (steel)	mm	2,9	2,9	2,9	–	3	3	3	3	5
	in.	0.11	0.11	0.11	–	0.12	0.12	0.12	0.12	0.20
s (stainless steel)	mm	2,3	2,3	2,3	3	3	3	3	4	5
	in.	0.09	0.09	0.09	0.12	0.12	0.12	0.12	0.16	0.20
b	mm	12	12	12	12	12	17	17	17	22
	in.	0.47	0.47	0.47	0.47	0.47	0.67	0.67	0.67	0.87

Ordering Information

Steel 1.0831	Part No.	**26904**	**26905**	**26906**	**–**	**26917**	**–**	**–**	**–**	**–**
Stainless steel 1.4301	Part No.	**88640**	**88641**	**88642**	**88643**	**88718**	**88719**	**88646**	**88647**	**88648**

Not suited for the mounting of turbo molecular pumps

Reducing Flanges (Stainless Steel 1.4301)

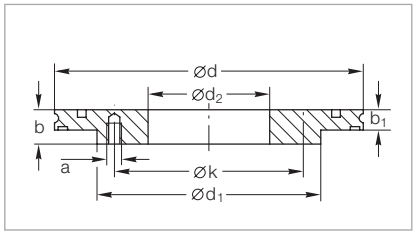

Dimensional drawing for the reducing flanges

Technical Data

DN	ISO-K	160/63	160/100	200/100	200/160	250/160
a	thread	M 8	M 8	M 8	M 10	M 10
b	mm (in.)	22 (0.87)	25 (0.98)	20 (0.79)	25 (0.98)	22 (0.87)
b_1	mm (in.)	12 (0.47)	12 (0.47)	12 (0.47)	12 (0.47)	12 (0.47)
d	mm (in.)	180 (7.09)	180 (7.09)	240 (9.49)	240 (9.49)	290 (11.42)
d_1	mm (in.)	130 (5.12)	165 (6.50)	165 (6.50)	225 (8.86)	225 (8.86)
d_2	mm (in.)	70 (2.76)	102 (4.02)	102 (4.02)	153 (6.02)	153 (6.02)
k	mm (in.)	110 (4.33)	145	145 (5.71)	200 (7.87)	200 (7.87)

Ordering Information

Stainless steel	Part No.	**886 14**	**886 15**	**886 17**	**886 16**	**886 50**

Important: In the table of Chapter “General” the German designation for the type of steel is also stated in accordance with AISI.

Reducers (Stainless Steel)

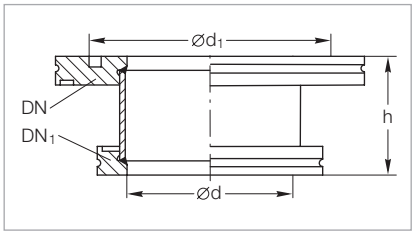

Dimensional drawing for the reducers

Technical Data

DN	ISO-K	100	250
DN_1	ISO-K	63	200
d	mm (in.)	70 (2.76)	213 (8.39)
d_1	mm (in.)	102 (4.02)	261 (10.28)
h	mm (in.)	50 (1.97)	50 (1.97)

Ordering Information

Stainless steel 1.4301	Part No.	**887 89**	**887 93**

Not suited for the mounting of turbo molecular pumps

Pipe Bend (Stainless Steel 1.4301); from DN 160 ISO-K Mitred Elbow

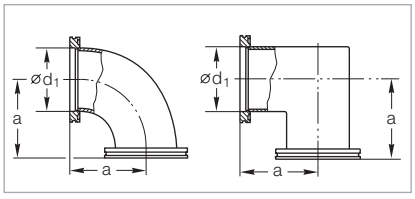

Dimensional drawing for the pipe bends (left) and the mitred elbows (right)

Technical Data

DN	ISO-K	63	100	160	250
a	mm (in.)	88 (3.46)	108 (4.25)	138 (5.43)	208 (8.19)
d_1	mm (in.)	70 (2.76)	102 (4.02)	153 (6.02)	261 (10.28)
Weight	kg (lbs.)	1.1 (2.43)	2.2 (4.8)	5.9 (13.02)	9.9 (21.85)
Conductance	l/s	208	470	1200	3700

Ordering Information

Stainless steel	Part No.	**887 25**	**887 26**	**887 27**	**887 28**

Not suited for the mounting of turbo molecular pumps

Important: In the table of Chapter "General" the German designation for the type of steel is also stated in accordance with AISI.

Tees (Stainless Steel 1.4301)

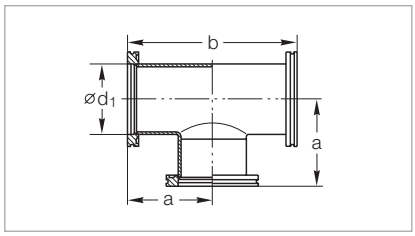

Dimensional drawing for the tees

Technical Data

DN	ISO-K	63	100	160	250
a	mm (in.)	88 (3.46)	108 (4.25)	138 (5.43)	208 (8.19)
b	mm (in.)	176 (6.93)	216 (8.50)	276 (10.87)	416 (16.38)
d_1	mm (in.)	70 (2.76)	102 (4.02)	153 (6.02)	261 (10.28)
Weight	kg	1.6 (3.53)	3.2 (7.06)	7.6 (16.78)	8.1 (17.88

Ordering Information

Stainless steel	Part No.	**887 35**	**887 36**	**887 37**	**887 38**

Not suited for the mounting of turbo molecular pumps

4-Way Crosses (Stainless Steel 1.4301)

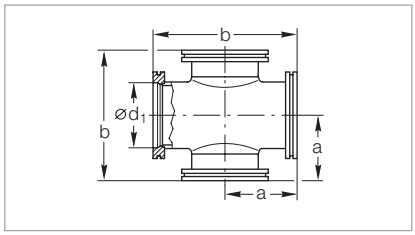

Dimensional drawing for the 4-way crosses

Technical Data

DN	ISO-K	63	100	160	250
a	mm (in.)	88 (3.46)	108 (4.25)	138 (5.43)	208 (8.19)
b	mm (in.)	176 (6.93)	216 (8.50)	276 (10.87)	416 (16.38)
d_1	mm (in.)	70 (2.76)	102 (4.02)	153 (6.02)	261 (10.28)

Ordering Information

Stainless steel	Part No.	**887 45**	**887 46**	**887 47**	**887 48**

Not suited for the mounting of turbo molecular pumps

Branching Pieces with lateral DN 16/25/40 ISO-KF Flanges (Stainless Steel 1.4301)

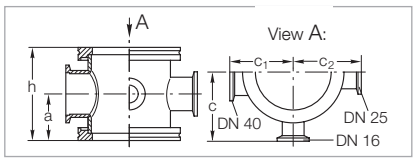

Dimensional drawing for the branching pieces with lateral DN 16/25/40 flanges

Can not be used with collar flanges ISO-F and DIN EN 1092-1

Technical Data

DN	ISO-K	63	100	160
a	mm (in.)	44 (1.73)	50 (1.97)	50 (1.97)
h	mm (in.)	88 (3.46)	100 (3.94)	100 (3.94)
c	mm (in.)	66 (2.60)	82 (3.23)	107 (4.21)
c_1	mm (in.)	59 (2.32)	77 (3.03)	105 (4.13)
c_2	mm (in.)	64 (2.52)	80 (3.15)	107 (4.21)

Ordering Information

Stainless steel	Part No.	**886 71**	**886 72**	**886 73**

Important: In the table of Chapter “General” the German designation for the type of steel is also stated in accordance with AISI.

Adaptors-Reducers ISO-K – ISO-KF

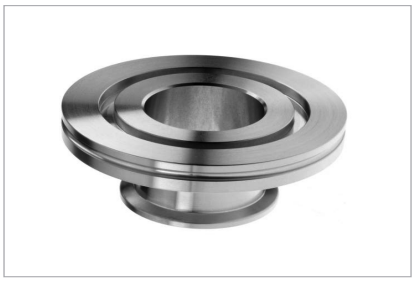

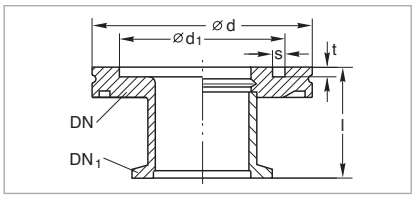

Dimensional drawing for the adaptors-reducer ISO-K – ISO-KF;
left: aluminium; right: stainless steel

Technical Data

DN	ISO-K	63	63	100
DN_1	ISO-KF	40	50	40
d	mm (in.)	95 (3.74)	95 (3.74)	130 (5.12)
d_1	mm (in.)	70 (2.76)	70 (2.76)	102 (4.02)
l	mm (in.)	40 (1.57)	45 (1.77)	40 (1.57)
s	mm (in.)	5 (0.2)	5 (0.2)	5 (0.2)
t	mm (in.)	4.5 (0.16)	4.5 (0.16)	4.5 (0.16)
Weight	kg (lbs)	0.5 (1.1)	0.6 (1.32)	0.8 (1.77)

Ordering Information

Stainless steel 1.4301	Part No.	**887 40**	**887 41**	**887 42**
Aluminium 3.2315.71	Part No.	**269 40**	**269 41**	**–**
Not suited for the mounting of turbo molecular pumps				

Adaptors ISO-K – CF

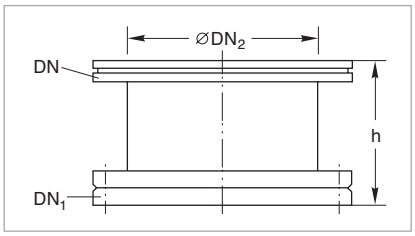

Dimensional drawing for the adaptors ISO-K – CF

Technical Data

DN	ISO-K	63	100	160
DN_1	CF	63	100	160
o. D.	inch	4 1/2	6	8
DN_2	mm (in.)	66 (2.60)	104 (4.09)	153 (6.02)
h	mm (in.)	90 (3.54)	90 (3.54)	90 (3.54)

Ordering Information

Stainless steel 1.4301	Part No.	**837 01**	**837 02**	**837 03**

Important: In the table of Chapter “General” the German designation for the type of steel is also stated in accordance with AISI.

Bellows (Stainless Steel 1.4571) with Flanges (Stainless Steel 1.4301)

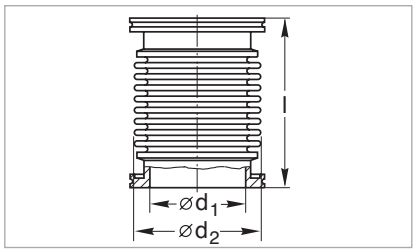

Dimensional drawing for the bellows

Technical Data

DN	ISO-K	63	100	160	250
d_1	mm (in.)	66 (2.60)	95 (3.74)	153 (6.02)	261 (10.78)
d_2	mm (in.)	83.7 (3.30)	120 (4.72)	186 (7.32)	305 (12.01)
l	mm (in.)	132 (5.20)	132 (5.20)	150 (5.91)	200 (7.87)
Weight	kg (lbs)	1.0 (2.21)	3.9 (8.61)	6.2 (13.69)	9.3 (20.53)
Compression	mm (in.)	20 (0.79)	28 (1.10)	22 (0.87)	30 (1.18)
Tension	mm (in.)	20 (0.79)	28 (1.10)	22 (0.87)	30 (1.18)
Max. bending angle	degrees [1]	± 30°	± 30°	± 14°	± 13°
Lateral displacement	mm (in.)	7.5 (0.28)	9.0 (0.35)	3.5 (0.14)	4.5 (0.18)

Ordering Information

Stainless steel	Part No.	**887 70**	**887 71**	**887 72**	**887 68**

[1] When utilizing the maximum bend, no extension along the axial axis will be possible!

Flexible Vacuum Hoses (Stainless Steel 1.4571) with Flanges (Stainless Steel 1.4301)

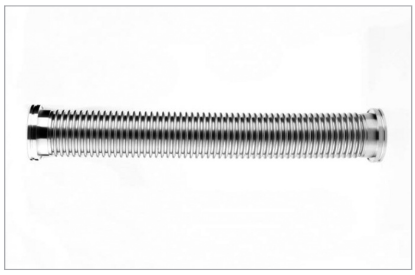

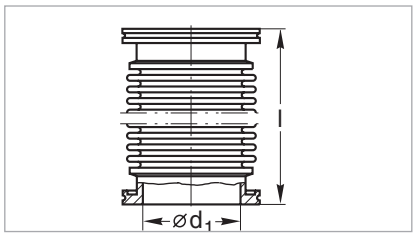

Dimensional drawing for the flexible vacuum hoses

Technical Data

DN	ISO-K	63	63	63	63	100	100	100	100
d_1	mm	70	70	70	70	102	102	102	102
	in.	2.76	2.76	2.76	2.76	4.02	4.02	4.02	4.02
l	mm	250	500	750	1000	250	500	750	1000
	in.	9.84	19.69	29.53	39.37	9.84	19.69	29.53	39.37
Max. bending radius									
with multiple bending	mm	250	250	250	250	370	370	370	370
	in.	9.84	9.84	9.84	9.84	14.57	14.57	14.57	14.57
with single bend	mm	160	160	160	160	240	240	240	240
	in.	8.30	8.30	8.30	8.30	9.45	9.45	9.45	9.45

Ordering Information

Stainless steel	Part No.	**868 37**	**867 97**	**868 34**	**868 07**	**868 38**	**867 98**	**868 35**	**868 08**

Important: In the table of Chapter “General” the German designation for the type of steel is also stated in accordance with AISI.

Flexible Compensation Elements (CR)

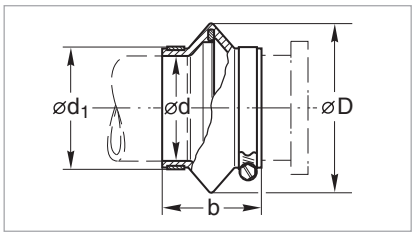

Dimensional drawing for the flexible compensation elements

Technical Data

DN	ISO-K	63	100	160
D	mm (in.)	120 (4.72)	150 (5.91)	200 (7.87)
d	mm (in.)	75 (2.95)	106 (4.17)	155 (6.10)
d_1	mm (in.)	85 (3.35)	116 (4.57)	165 (6.50)
b	mm (in.)	70 (2.76)	72 (2.83)	72 (2.83)

Ordering Information

CR	Part No.	**272 23** [1]	**272 24** [1]	**272 25** [1]

[1] Is supplied complete with stainless steel hose clamps

Connections for Flexible Compensation Elements (Aluminium 3.2315.71)

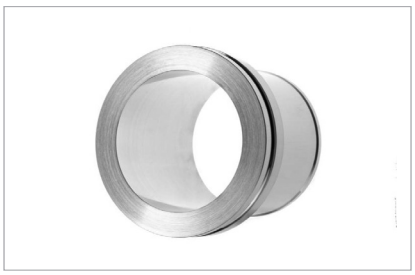

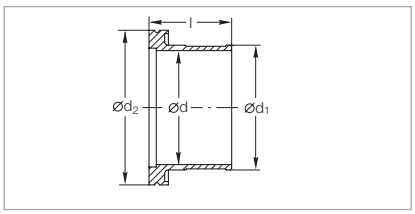

Dimensional drawing for the connections for flexible compensation elements

Technical Data

DN	ISO-K	63	100	160
d	mm (in.)	70 (2.76)	102 (4.02)	150 (5.91)
d_1	mm (in.)	76 (2.99)	107 (4.21)	156 (6.14)
d_2	mm (in.)	95 (3.74)	130 (5.12)	180 (7.09)
l	mm (in.)	51 (2.01)	56 (2.20)	56 (2.20)

Ordering Information

Aluminium	Part No.	**272 35**	**272 36**	**272 37**

Important: In the table of Chapter “General” the German designation for the type of steel is also stated in accordance with AISI.

Bolts for Clamp Flange Fittings (Steel 8.8, zinc coated)

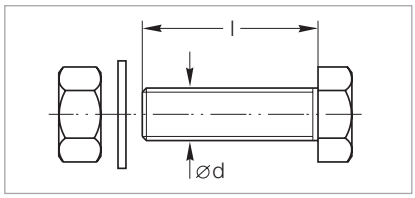

Dimensional drawing for the bolts for clamp flange fittings

Technical Data

DN	ISO-F	63 – 100	160 – 250	320 – 500
Dimensions				
d	thread	M 8	M 10	M 12
l	mm (in.)	40 (1.57)	50 (1.97)	70 (2.76)
Quantity per set				
Bolts		8	12	16
Nuts		8	12	16
Washers		8	12	16

Ordering Information

Set	Part No.	**887 81**	**887 82**	**887 83 (*)**

(*) Also suitable for DN 630 connections. 20 pieces needed for each connection.

Important: In the table of Chapter “General” the German designation for the type of steel is also stated in accordance with AISI.

Only available for purchase in North and South America

ISO-K to NPT Adaptor

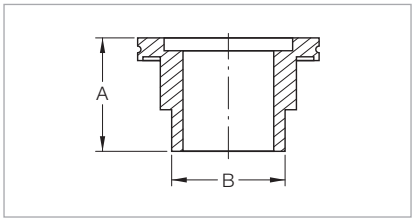

Dimensional drawing for the ISO-K / NPT adaptor

Technical Data

DN		63 ISO-K / 2" NPT
A	**mm (in.)**	60.0 (2.36)
ø B	**mm (in.)**	51.0 (2" NPT)

Ordering Information

Stainless steel	Part No.	**72103040**

Flanges and Fittings

Important: In the table of Chapter "General" the German designation for the type of steel is also stated in accordance with AISI.

ISO-F and DIN EN 1092-1 Fixed Flange Fittings, ND 6

Note: ND 6 states a dimension and not refer to an operating pressure of 6 bar!

Mating clamp flanges with tubulation using collar rings and sealing disk

In addition to clamp flange connections, fixed welded flanges (ISO-F or to DIN EN 1092-1) are used in the area of vacuum engineering to interconnect valves, pumps and other components.

Advantages to the User

- A high vacuum seal is maintained also at large nominal width and high mechanical loads
- Evenly distributed sealing force through a large number of bolts
- Can be easily adapted to other flange systems
- Vacuum sealing disks consist of a CR O-ring seal with inner and outer aluminium ring
- Fixed flanges and collar flanges may also be constructed as all-metal seals by using ultra sealing disks

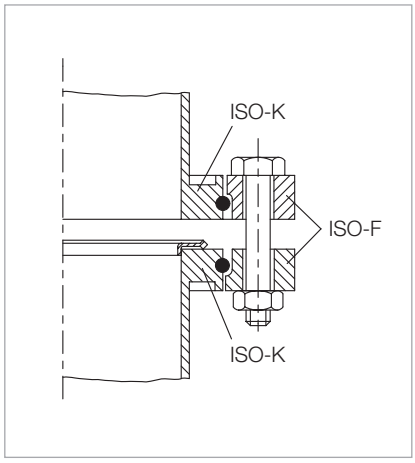

Mating clamp flanges using bolted collar rings and ultra sealing disk

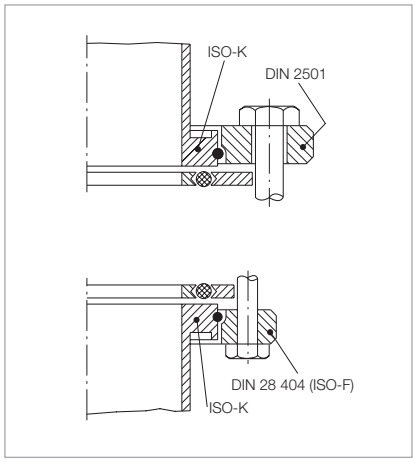

Comparison: Clamp flange with collar flange to DIN EN 1092-1 and clamp flange with collar flange to DIN 28 404; ISO-F

Collar Flange	Steel	Stainless steel
Bolts and nuts	Galvanized 8.8 steel	1.4401
Retaining ring	Steel	1.4310

Important: In the table of Chapter “General” the German designation for the type of steel is also stated in accordance with AISI.

ISO-F Fixed Flange Fittings

Vacuum Sealing Disks for ISO-F Flanges (Aluminium/CR)

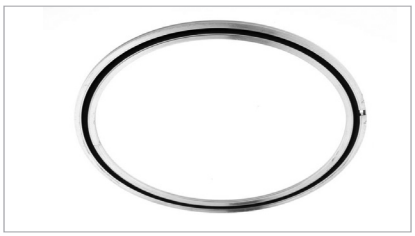

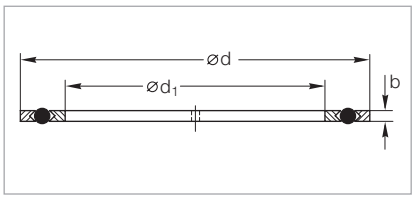

Dimensional drawing for vacuum sealing disks

Technical Data

DN	ISO-F	63	100	160	250	320
d	mm (in.)	98 (3.86)	132 (5.20)	185 (7.28)	295 (11.61)	375 (14.76)
d_1	mm (in.)	73 (2.87)	107 (4.21)	160 (6.30)	270 (10.63)	330 (12.99)
b	mm (in.)	4 (0.16)	4 (0.16)	4 (0.16)	4 (0.16)	6 (0.24)

Ordering Information

Aluminium/CR	Part No.	**171 09**	**171 10**	**171 11**	**171 12**	**171 19**

Technical Data

DN	ISO-F	400	500	630	800	1000
d	mm (in.)	460 (18.11)	560 (22.05)	701 (27.60)	870 (34.25)	1070 (42.13)
d_1	mm (in.)	415 (16.34)	515 (20.28)	656 (25.83)	825 (32.48)	1025 (40.35)
b	mm (in.)	6 (0.24)	6 (0.24)	6 (0.24)	6 (0.24)	6 (0.24)

Ordering Information

Aluminium/CR	Part No.	**171 14**	**171 15**	**171 16**	**171 17**	**171 18**

Spare O-Ring Gaskets for ISO-F Flange Connection

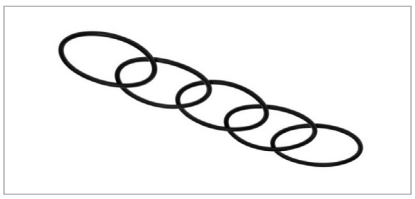

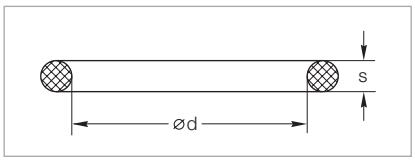

Dimensional drawing for O-rings

Technical Data

DN	ISO-F	63	100	160	250	320
d	mm (in.)	80 (3.15)	110 (4.33)	165 (6.50)	265 (10.43)	325 (12.75)
s	mm (in.)	5 (0.20)	5 (0.20)	5 (0.20)	5 (0.20)	8 (0.31)
Quantity per set		5	5	5	5	1

Ordering Information

CR	Part No.	**ES210701**	**ES210711**	**ES210716**	**ES210721**	**E210726**

Technical Data

DN	ISO-F	400	630	800	1000
d	mm (in.)	412 (16.22)	640 (25.20)	820 (32.28)	1023 (40.28)
s	mm (in.)	8 (0.31)	8 (0.31)	8 (0.31)	8 (0.31)
Quantity per set		1	1	1	1

Ordering Information

CR	Part No.	**E210731**	**E210741**	**E210746**	**E210751**

Important: In the table of Chapter “General” the German designation for the type of steel is also stated in accordance with AISI.

Ultra Sealing Disks (Aluminium 3.2315.71) for ISO-F Flanges

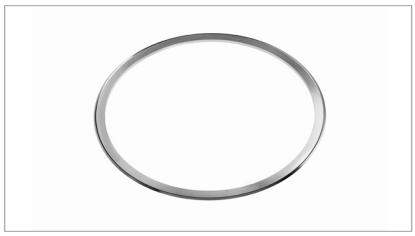

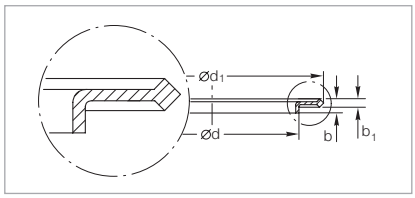

Dimensional drawing for O-rings

Technical Data

DN	ISO-K / ISO-F	63	100	160	250
b	mm (in.)	4.5 (0.18)	4.5 (0.18)	4.5 (0.18)	4.5 (0.18)
b_1	mm (in.)	2.6 (0.10)	2.6 (0.10)	2.6 (0.10)	2.6 (0.10)
d	mm (in.)	69.8 (2.75)	101.8 (4.01)	152.8 (6.02)	260.8 (10.27)
d_1	mm (in.)	85.6 (3.37)	116.6 (4.59)	166.6 (6.56)	276.6 (10.89)

Ordering Information

Aluminium	Part No.	**886 24**	**886 25**	**886 26**	**886 27**

Measurement Flanges

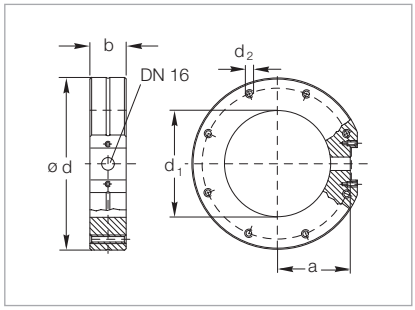

Dimensional drawing for the measurement flanges

Technical Data

DN	ISO-F	63	100	160
a	mm (in.)	52.3 (2.06)	71.3 (2.81)	102.3 (4.03)
b	mm (in.)	30 (1.18)	30 (1.18)	30 (1.18)
d	mm (in.)	130 (5.12)	165 (6.50)	225 (8.86)
d_1	mm (in.)	70 (2.76)	102 (4.02)	153 (6.02)
d_2	thread	M 8	M 8	M 10
Number of threaded holes		4	8	8

Ordering Information

Stainless steel 1.4301	Part No.	**286 60**	**286 61**	**286 62**
Recommended centering ring (2x)	Part No.	**887 03**	**887 04**	**887 07**

Important: In the table of Chapter “General” the German designation for the type of steel is also stated in accordance with AISI.

ISO-F Collar Flanges with Retaining Ring for use with Clamp Flange Fittings (Steel 1.0037) and Stainless Steel

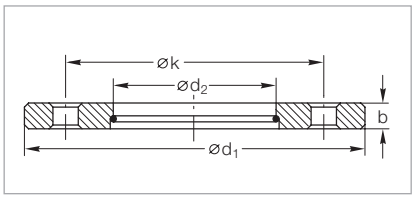

Dimensional drawing for collar flanges with retaining ring

Technical Data

DN	ISO-F	63	100	160	200	250
d_1	mm (in.)	130 (5.12)	165 (6.50)	225 (8.86)	285 (11.22)	335 (13.19)
d_2	mm (in.)	95.6 (3.76)	130.6 (5.14)	180.9 (7.12)	240.9 (9.48)	290.9 (11.45)
k	mm (in.)	110 (4.93)	145 (5.71)	200 (7.87)	260 (10.24)	310 (12.20)
b	mm (in.)	12 (0.47)	12 (0.47)	16 (0.63)	16 (0.63)	16 (0.63)
Number of holes		4	8	8	12	12

Ordering Information

Nickel-plated steel	Part No.	**267 67**	**267 70**	**267 71**	**267 68**	**267 72**

Technical Data

DN	ISO-F	320	400	500	630
d_1	mm (in.)	425 (16.73)	510 (20.08)	610 (24.02)	750 (29.53)
d_2	mm (in.)	370.8 (14.60)	451.0 (17.76)	551.0 (21.69)	691.0 (27.20)
k	mm (in.)	395 (15.51)	480 (18.90)	580 (22.83)	720 (28.35)
b	mm (in.)	20 (0.79)	20 (0.79)	20 (0.79)	24 (0.95)
Number of holes		12	16	16	20

Ordering Information

Nickel-plated steel	Part No.	**267 76**	**267 74**	**267 75**	**267 77**

Important: In the table of Chapter “General” the German designation for the type of steel is also stated in accordance with AISI.

Bolts, Nuts and Washers for Joints with VAT Gate Valves

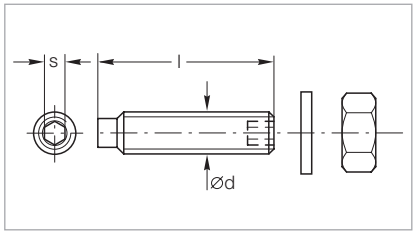

Dimensional drawing for the set screws, nuts and washers

Technical Data

DN	ISO-F	63 – 100	63 – 100	160 – 250
Dimensions				
d	thread	M 8	M 8	M 10
l	mm (in.)	45 (1.77)	50 (1.97)	55 (2.17)
s	mm (in.)	4 (0.16)	4 (0.16)	6 (0.24)
Quantity per set				
Bolts		16	16	12
Nuts		16	16	12
Washers		16	16	12

Ordering Information

Set	Part No.	**839 13**	**83913V01**	**210 071**

Important: In the table of Chapter “General” the German designation for the type of steel is also stated in accordance with AISI.

DIN EN – Fixed Flange Fittings ND 6

Outside dimensions and hole pattern in accordance to DIN EN 1092-1; inside contour similar with DIN 28404

Note: ND 6 states a dimension and does not refer to an operating pressure of 6 bar!

Spare O-Ring Gaskets for Vacuum Sealing Disks DIN EN 1092-1

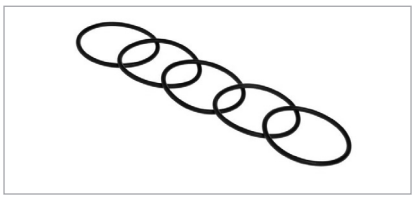

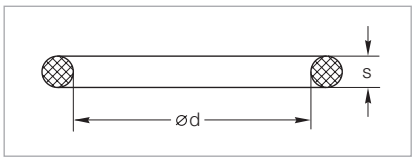

Dimensional drawing for O-ring gaskets

Technical Data

DN	ISO-F	63	100	160
d	mm (in.)	80 (3.15)	110 (4.23)	165 (6.50
s	mm (in.)	5 (0.20)	5 (0.20)	5 (0.20)
Quantity per set		5	5	5

Ordering Information

CR	Part No.	**ES210701**	**ES210711**	**ES210716**

Collar Flanges with Retaining Ring (Steel 1.4301)

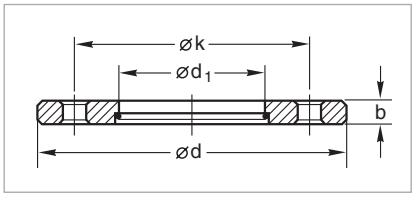

Dimensional drawing for collar flanges with retaining ring

Technical Data

DN	ISO-F	63	100	160
d	mm (in.)	160 (6.30)	210 (8.27)	265 (10.43)
d_1	mm (in.)	95.6 (3.76)	130.6 (5.14)	180.9 (7.12)
k	mm (in.)	130 (5.12)	170 (6.69)	225 (8.86)
b	mm (in.)	12 (0.47)	15 (0.59)	15 (0.59)

Ordering Information

Stainless steel	Part No.	**86747V01**	**86750V01**	**86751V01**

Bolts and Nuts for DIN Collar Flange

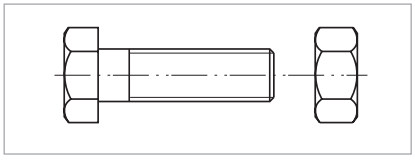

Dimensional drawing for bolts and nuts

Technical Data

DN	ISO-F	63	100	160	250
Dimensions					
d	thread	M 12	M 16	M 16	M 16
l	mm (in.)	40 (1.57)	50 (1.97)	50 (1.97)	50 (1.97)
Number of bolts/nuts required		4	8	8	12

Ordering Information

1 bolt (galvanized 8.8 steel)	Part No.	**201 02 381**	**201 02 434**	**201 02 434**	**201 02 434**
1 nut (galvanized 8.8 steel)	Part No.	**211 01 115**	**211 01 117**	**211 01 117**	**211 01 117**

Important: In the table of Chapter "General" the German designation for the type of steel is also stated in accordance with AISI.

Only available for purchase in North and South America

ANSI Fittings

Flanges, Rotatable Bolt Type

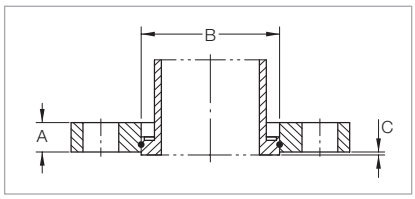

Dimensional drawing for the flanges, rotatable type
(tube piece shown in phantom not included)

Technical Data

DN	ISO-K to ANSI	63 3"	100 4"	160 6"	250 10"
A	mm (in.)	13.0 (0.50)	13.0 (0.50)	16.0 (0.63)	22.0 (0.88)
ø B	mm (in.)	95.5 (3.76)	131.0 (5.14)	181.0 (7.12)	291.0 (11.45)
C	mm (in.)	1 (0.039)	1 (0.039)	1 (0.039)	1 (0.039)

Ordering Information

Stainless steel	Part No.	**982780700**	**982780701**	**982780702**	**982780703**
Spare retaining ring (Set of 10 pcs)	Part No.	**ES23102401**	**ES23102402**	**ES23102412**	

Bellows

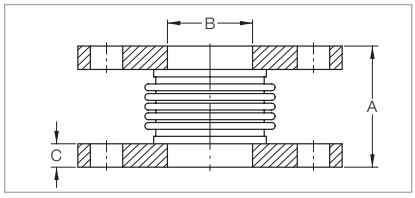

Dimensional drawing for the bellows

Combined axial/lateral deflection cannot exceed 100%.
Example: 75% axial rating – 25% lateral rating

Technical Data

DN	ANSI	3"	4"	6"
A	mm (in.)	120 (4.72)	120 (4.72)	200 (7.87)
ø B	mm (in.)	78 (3.07)	102 (4.03)	154 (6.07)
C	mm (in.)	12.7 (0.50)	12.7 (0.50)	12.7 (0.50)
Rated deflection in axial	mm (in.)	15 (0.58)	18 (0.70)	29.5 (1.16)
Rated deflection in lateral	mm (in.)	5 (0.19)	6 (0.22)	8 (0.31)
Spring rate	lbf/in.	263	340	260
Compression / tension	mm (in.)	11.68 / 3.56 (0.460 / 0.140)	14.22 / 3.56 (0.560 / 0.140)	22.86 / 6.60 (0.900 / 0.260)

Ordering Information

Stainless steel bellows with carbon steel flanges	Part No.	**991051013**	**991051014**	**991051016**

Important: In the table of Chapter “General” the German designation for the type of steel is also stated in accordance with AISI.

Only available for purchase in North and South America

Sealing Disk Assembly

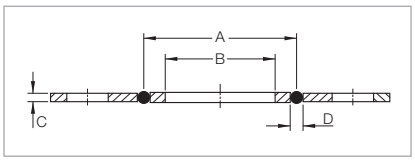

Dimensional drawing for the sealing disk assembly

Technical Data

DN	ANSI	3"	4"	6"
A	mm (in.)	91 (3.60)	121 (4.75)	171 (6.72)
ø B	mm (in.)	78 (3.07)	102 (4.03)	154 (6.07)
C	mm (in.)	3.2 (0.13)	3.2 (0.13)	3.2 (0.13)
ø D	mm (in.)	4 (0.16)	4 (0.16)	4 (0.16)

Ordering Information

Aluminium	Part No.	**910181605**	**910181606**	**910181607**
Stainless steel	Part No.	**–**	**910181617**	**–**

Flanges and Fittings

Important: In the table of Chapter “General” the German designation for the type of steel is also stated in accordance with AISI.

CF Flange Fittings and Components

CF Flanges

The CF flange connection consists of two identical flanges with a flat gasket made of **OFHC copper**, bolts, nuts and washers.

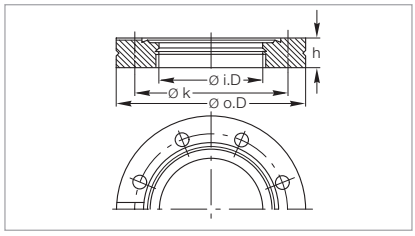

Dimensional drawing for CF flanges

Sealing Principle

When assembling the CF flange connection, the flat copper gasket fits with a slight clearance into the outer recess of the flanges and thus assures good centering of the flange connection. If the flange bolts are properly tightened according to the instructions, the knife edge of the flanges penetrates into the flat copper gasket, whereby the shear action of the outer face of the cutting edge – as seen from the flange axis - produces a yield pressure on the copper gasket, while the inner face of the edge produces a cutting action.

During this process the copper gasket adapts it-self optimally to the micro-structure of the outer knife edge. This explains the high sealing effect and the especially low leak rates of CF flange connections. A radial grove extending right up to the sealing ring is provided for leak testing of the flange connection. In order to ensure that the sealing knife edge is not damaged during frequent use of the flanges, the conventional geometry of such knife edges for CF flanges has been developed further. By using the Leybold developed obtuse angled knife edge profile the strength of the sealing knife edges has been significantly stabilized. In addition to the actual knife edge, the flanges are provided with a concentric sealing surface for placement of a FPM (FKM) gasket or a supporting ring with FPM O-ring, which may be baked up to 150 °C (302 °F) (does not apply to observation windows).

This design has the advantage, that it is possible to equip the apparatus with elastomer gaskets prior to final assembly, so that the system can be tested under normal high vacuum conditions.

Technical Data

DN	CF	16	40	63	100	160	200	250
Outside diameter o. D.	mm (in.)	34 (1.33)	69.5 (2.75)	113.5 (4.50)	152 (6.00)	202.5 (8.00)	253 (10.00)	305 (12.00)
Inside diameter i. D.	mm (in.)	16 (0.63)	36.8 (1.375)	66 (2.50)	104 (4.00)	155 (6.00)	200 (8.00)	250 (10.00)
Bolt circle diameter k	mm (in.)	27 (1.06)	58.7 (2.31)	92.2 (3.63)	130.3 (5.13)	181 (7.13)	231.8 (9.13)	284 (11.18)
High h	mm (in.)	7.5 (0.30)	13 (0.51)	17.5 (0.69)	20 (0.79)	22 (0.87)	24.5 (0.97)	24.5 (0.97)
Number of holes		6	6	8	16	20	24	32
Hole diameter	mm (in.)	4.3 (0.17)	6.6 (0.26)	8.4 (0.33)	8.4 (0.33)	8.4 (0.33)	8.4 (0.33)	8.4 (0.33)

Conversion Factors

1. Magnetizing field H, unit:	A x m^{-1}
Previously used unit: Oerstedt (Oe)	1 Oe = 79,577 (A x m^{-1})
2. Strength of the magnetic field B, unit:	Vs x m^2 = Tesla (T)
Previously used unit: Gauß (G)	1 G = 10^{-4} Vs x m^2 = 10^{-4} T

Important: In the table of Chapter “General” the German designation for the type of steel is also stated in accordance with AISI.

CF Components

CF components are manufactured according to the requirements outlined in the introductory chapter. They are made from selected and corrosion resistant types of stainless steel. Both design and production methods are such, that the components meet the requirements of UHV applications. All components are fusion welded from the inside to prevent fissures and pocket holes (virtual leaks which cannot be located by leak detection methods from the outside). If welding from the outside cannot be avoided due to design constraints, the welding seam penetrates to the inner side, the side of the vacuum.

A carefully implemented cleaning process and suitable packaging for the components are essential prerequisites for obtaining pressures in the UHV range within reasonably short pump down times after assembly (providing the remainder of the apparatus is clean too).

For applications in the extreme UHV range (XHV) the outgassing rate of the CF flanges and the UHV components can be reduced by about two orders of magnitude by a special degassing process.

Advantages to the User

- Low degassing rates
- High degassing temperature
- Leak rates below 1×10^{-11} mbar x l/s
- Basic dimensions correspond to those of the components from other international manufacturers
- Bolts may be inserted from the side of the body

Important: In the table of Chapter “General” the German designation for the type of steel is also stated in accordance with AISI.

Copper Gaskets for CF Flanges (OFHC Copper – Oxygen-Free)

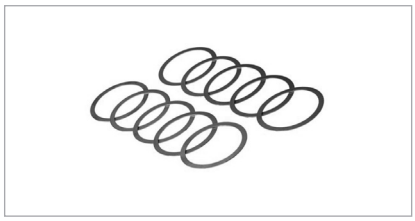

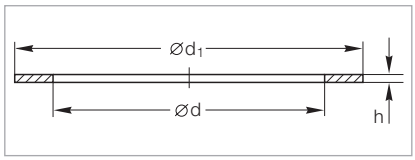

Dimensional drawing for the copper gaskets for CF flanges

Technical Data

DN	CF	16	40	63	100	160	200	250
Outside diameter	in.	1.33	2.75	4.50	6.00	8.00	10.00	12.00
d	mm (in.)	16.2 (0.64)	39 (1.54)	63.6 (2.50)	101.8 (4.01)	152.6 (6.01)	203.4 (8.01)	254 (10.00)
d_1	mm (in.)	21.3 (0.84)	48.1 (1.89)	82.4 (3.24)	120.5 (4.74)	171.3 (6.74)	222.1 (8.74)	272.7
Set of 5		–	–	–	–	–	–	x
Set of 10		x	x	x	x	x	x	–

Ordering Information

Quality: Standard	Part No.	**ES83941**	**ES83943**	**ES83944**	**ES83945**	**ES83946**	**ES83947**	**ES83948**

FPM (FKM) Profiled Gasket without Support Ring

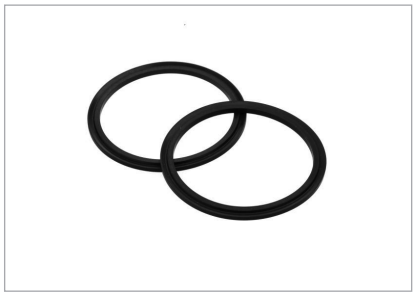

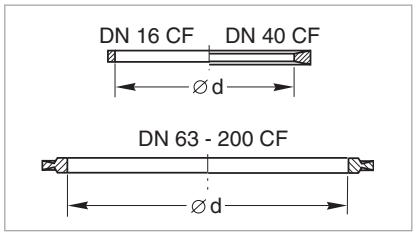

Dimensional drawing for the profiled gaskets without support ring

Technical Data

DN	CF	16	40	63	100	160	200
Outside diameter	in.	1.33	2.75	4.50	6.00	8.00	10.00
d	mm (in.)	16.0 (0.63)	42.0 (1.65)	69.7 (2.74)	107.8 (4.24)	156.0 (6.14)	206.0 (8.11)
Bakeout temperature	°C (°F)	160 (320)	160 (320)	160 (320)	160 (320)	160 (320)	160 (320)
Set of 2		–	–	x	x	x	x
Set of 5		x	x	–	–	–	–

Ordering Information

	Part No.	**ES83921**	**ES83923**	**ES83934**	**ES83935**	**ES83936**	**ES83937**

Important: In the table of Chapter “General” the German designation for the type of steel is also stated in accordance with AISI.

FPM (FKM) O-ring with Support Ring

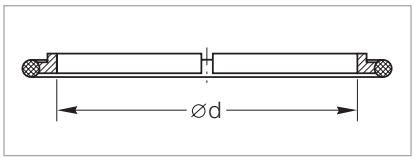

Dimensional drawing for the FPM (FKM) O-rings with support ring

Technical Data

DN	CF	250
Outside diameter	in.	12
d	mm (in.)	248.3 (9.78)
Bakeout temperature	°C (°F)	160 (320)

Ordering Information

FPM O-ring with support ring	Part No.	**839 03**

CF Blank Flanges, Fixed

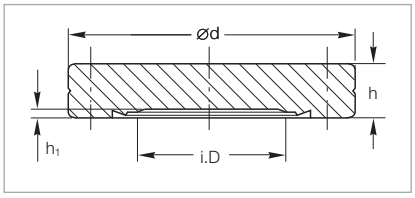

Dimensional drawing for the CF blank flanges, fixed

For missing dimensions see “Technical Data” at the beginning of the Chapter “CF Flanges”

Technical Data

DN	CF	16	40	63	100	160	200	250
Outside diameter	in.	1.33	2.75	4.50	6.00	8.00	10.00	12.00
Inside diameter	mm (in.)	14 (0.55)	38 (1.50)	66 (2.60)	104 (4.09)	155 (6.10)	205 (8.07)	256 (10.08)
d	mm (in.)	34 (1.34)	69.5 (2.74)	113.5 (4.47)	152 (5.98)	202.5 (7.97)	253 (9.96)	305 (12.01)
h	mm (in.)	7.5 (0.30)	13 (0.51)	17.5 (0.69)	20 (0.79)	22 (0.87)	24.5 (0.97)	24.5 (0.97)
h_1	mm (in.)	1.4 (0.06)	1.4 (0.06)	1.4 (0.06)	1.4 (0.06)	1.4 (0.06)	1.4 (0.06)	1.4 (0.06)

Ordering Information

Stainless steel DIN 1.4301	Part No.	**835 01**	**835 03**	**835 04**	**835 05**	**835 06**	**835 07**	**835 09**

Important: In the table of Chapter “General” the German designation for the type of steel is also stated in accordance with AISI.

CF Blank Flanges, Rotatable

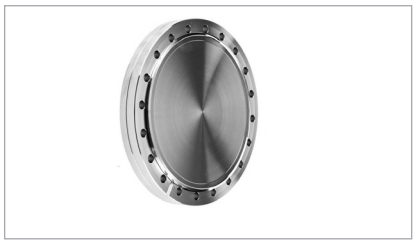

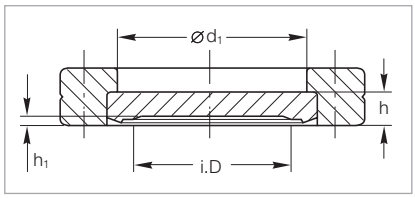

Dimensional drawing for the CF blank flanges, rotatable

For missing dimensions see “Technical Data” at the beginning of the Chapter “CF Flanges”

Technical Data

DN	CF	16	40	63	100	160	200	250
Outside diameter	in.	1.33	2.75	4.50	6.00	8.00	10.00	12.00
Inside diameter	mm (in.)	14 (0.55)	38 (1.50)	66 (2.60)	104 (4.09)	155 (6.10)	205 (8.07)	256 (10.08)
d_1	mm (in.)	18.6 (0.73)	41 (1.61)	71 (2.80)	109 (4.29)	160 (6.30)	206 (8.11)	257 (10.12)
h	mm (in.)	5.8 (0.23)	7.6 (0.30)	12.6 (0.50)	14.3 (0.56)	15.8 (0.62)	17.1 (0.67)	18 (0.71)
h_1	mm (in.)	1.4 (0.06)	1.4 (0.06)	1.4 (0.06)	1.4 (0.06)	1.4 (0.06)	1.4 (0.06)	1.4 (0.06)

Ordering Information

Stainless steel DIN 1.4301	Part No.	**835 21**	**835 23**	**835 24**	**835 25**	**835 26**	**835 27**	**835 29**

CF Bore Flanges, Fixed

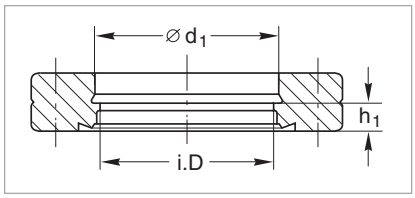

Dimensional drawing for the CF bore flanges, fixed

For missing dimensions see “Technical Data” at the beginning of the Chapter “CF Flanges”

Technical Data

DN	CF	16	40	63	100	160	200	250
Outside diameter	in.	1.33	2.75	4.50	6.00	8.00	10.00	12.00
Inside diameter	mm (in.)	16 (0.63)	36.8 (1.45)	66 (2.60)	104 (4.09)	155 (6.10)	200 (7.87)	250 (9.84)
d_1	mm (in.)	18.3 (0.72)	40.3 (1.59)	70.3 (2.77)	108.5 (4.27)	159.5 (6.28)	205.5 (8.09)	256.5 (10.10)
h_1	mm (in.)	4.2 (0.17)	5.5 (0.22)	9.5 (0.37)	11.0 (0.43)	12.0 (0.47)	12.5 (0.49)	12.5 (0.49)

Ordering Information

Stainless steel DIN 1.4301	Part No.	**835 41**	**835 37**	**835 38**	**835 39**	**835 40**	**835 47**	**835 49**

Important: In the table of Chapter “General” the German designation for the type of steel is also stated in accordance with AISI.

CF Bore Flanges, Rotatable

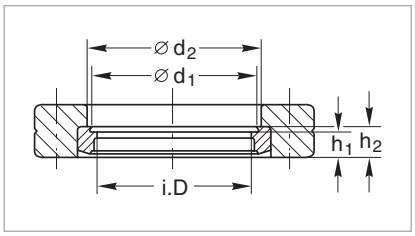

Dimensional drawing for the CF bore flanges, rotatable

For missing dimensions see “Technical Data” at the beginning of the Chapter “CF Flanges”

Technical Data

DN	CF	16	40	63	100	160	200	250
Outside diameter	in.	1.33	2.75	4.50	6.00	8.00	10.00	12.00
Inside diameter	mm (in.)	16 (0.63)	36.8 (1.45)	66 (2.60)	104 (4.09)	155 (6.10)	200 (7.87)	250 (9.84)
d_1	mm (in.)	18.3 (0.72)	40.3 (1.59)	70.3 (2.77)	108.5 (4.27)	159.5 (6.28)	205.5 (8.09)	256.5 (10.10)
d_2	mm (in.)	18.6 (0.73)	41 (1.61)	71 (2.80)	109 (4.29)	160 (6.30)	206 (8.11)	257 (10.12)
h	mm (in.)	4.2 (0.17)	5.5 (0.22)	9.5 (0.37)	11.0 (0.43)	12.0 (0.47)	12.5 (0.49)	12.5 (0.49)
h_1	mm (in.)	5.8 (0.23)	7.6 (0.30)	12.6 (0.50)	14.3 (0.56)	15.8 (0.62)	17.1 (0.67)	18.0 (0.71)

Ordering Information

Stainless steel DIN 1.4301	Part No.	**835 61**	**835 58**	**835 59**	**835 60**	**835 69**	**835 67**	**835 78**

CF Flanges with Tube End

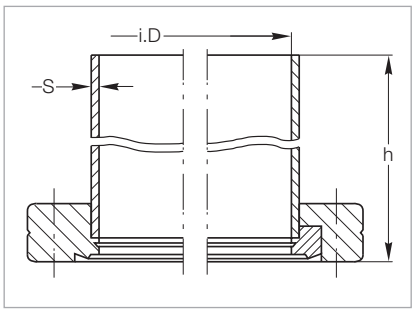

Dimensional drawing for the CF flanges with tube end; left fixed, right rotatable

For missing dimensions see “Technical Data” at the beginning of the Chapter “CF Flanges”

Technical Data

DN	CF	16	40	63	100	160
Outside diameter	in.	1.33	2.75	4.50	6.00	8.00
Inside diameter	mm (in.)	16 (0.63)	36.8 (1.45)	66 (2.60)	104 (4.09)	155 (6.10)
s	mm (in.)	1 (0.04)	1.6 (0.06)	2 (0.08)	2 (0.08)	2 (0.08)
h	mm (in.)	38 (1.50)	63 (2.48)	105 (4.13)	135 (5.32)	167 (6.58)

Ordering Information

Stainless steel DIN 1.4301						
Tube end						
fixed	Part No.	**835 51**	**835 31**	**835 32**	**835 33**	**835 34**
rotatable	Part No.	**835 71**	**835 82**	**835 74**	**835 75**	**835 76**

Important: In the table of Chapter “General” the German designation for the type of steel is also stated in accordance with AISI.

CF Reducing Flanges

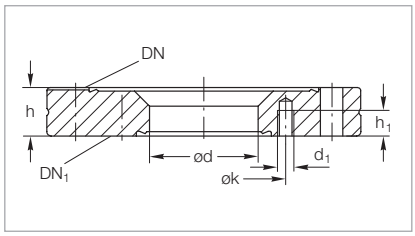

Dimensional drawing for the CF reducing flanges, fixed

For missing dimensions see “Technical Data” at the beginning of the Chapter “CF Flanges”

Technical Data

DN	**CF**	40	63	100	100	160	160
Outside diameter	**in.**	2.75	4.50	6.00	6.00	8.00	8.00
DN_1	**CF**	16	40	40	63	40	100
k	**mm (in.)**	27 (1.06)	58.7 (2.31)	58.7 (2.31)	92.2 (3.63)	58.7 (2.31)	130 (5.12)
h	**mm (in.)**	13 (0.51)	17.5 (0.69)	20 (0.79)	20 (0.79)	22 (0.87)	22 (0.87)
h_1	**mm (in.)**	5.5 (0.22)	9 (0.35)	9 (0.35)	11 (0.43)	9 (0.35)	11 (0.43)
d	**mm (in.)**	16 (0.63)	39 (1.54)	39 (1.54)	66 (2.60)	39 (1.54)	104 (4.09
d_1	**mm (in.)**	M 4 (M 4)	M 6 (M 6)	M 6 (M 6)	M 8 (M 8)	M 6 (M 6)	M 8 (M 8)

Ordering Information

Stainless steel DIN 1.4301	Part No.	**836 85**	**836 86**	**836 87**	**836 89**	**836 90**	**836 91**
Matching stud bolts	Part No.	**839 10**	**839 11**	**839 11**	**839 13 / 83913V01**	**839 11**	**839 13 / 83913V01**

CF Reducing Pieces

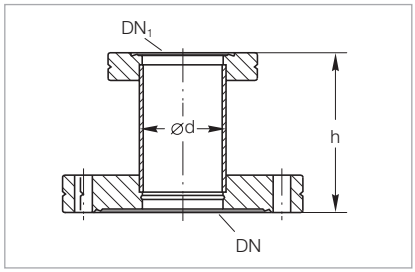

Dimensional drawing for the CF reducing pieces

For missing dimensions see “Technical Data” at the beginning of the Chapter “CF Flanges”

Technical Data

DN	**CF**	40	63	100	100	160
Outside diameter	**in.**	2.75	4.50	6.00	6.00	8.00
DN_1	**CF**	16	40	40	63	100
h	**mm**	45 (1.77)	75 (2.95)	75 (2.95)	95 (3.74)	105 (4.13)
d (tube)	**mm**	18 (0.71)	40 (1.57)	40 (1.57)	70 (2.76)	108 (4.25)

Ordering Information

Stainless steel DIN 1.4301	Part No.	**837 10**	**837 15**	**837 16**	**837 19**	**837 22**

Important: In the table of Chapter “General” the German designation for the type of steel is also stated in accordance with AISI.

Pipe Bend 90°; from DN 160 CF Mitred Elbow

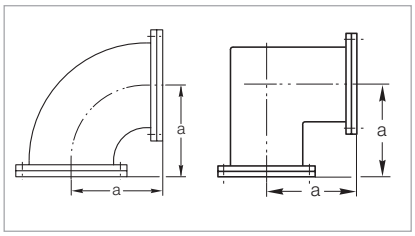

Dimensional drawing for the pipe bends 90° (left) and the mitred elbows (right)

For missing dimensions see “Technical Data” at the beginning of the Chapter “CF Flanges”

Technical Data

DN	CF	16	40	63	100	160
Outside diameter	in.	1.33	2.75	4.50	6.00	8.00
a	mm (in.)	38 (1.50)	63 (2.48)	105 (4.13)	135 (5.32)	167 (6.58)

Ordering Information

Stainless steel DIN 1.4301						
Elbow 90° with a rotatable flange	Part No.	**836 04**	**836 05**	**836 06**	**836 07**	**836 08**

Not suited for the mounting of turbo molecular pumps

Tees

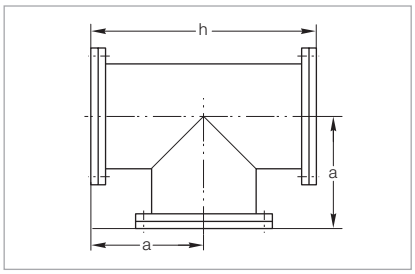

Dimensional drawing for the tees

For missing dimensions see “Technical Data” at the beginning of the Chapter “CF Flanges”

Technical Data

DN	CF	16	40	63	100	160
Outside diameter	in.	1.33	2.75	4.50	6.00	8.00
a	mm (in.)	38 (1.50)	63 (2.48)	105 (4.13)	135 (5.32)	167 (6.58)
h	mm (in.)	76 (2.99)	126 (4.96)	210 (8.27)	270.(10.63)	334 (13.15)

Ordering Information

Stainless steel DIN 1.4301						
Tee with a rotatable flange on each axis	Part No.	**836 14**	**836 15**	**836 16**	**836 17**	**836 18**

Not suited for the mounting of turbo molecular pumps

Important: In the table of Chapter “General” the German designation for the type of steel is also stated in accordance with AISI.

Crosses

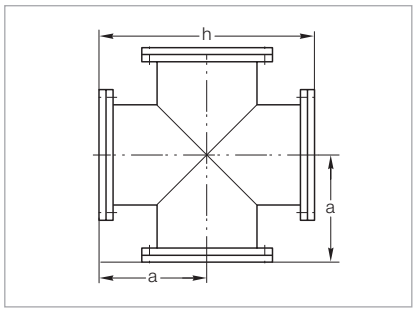

Dimensional drawing for the crosses

For missing dimensions see “Technical Data” at the beginning of the Chapter “CF Flanges”

Technical Data

DN	CF	16	40	63	100	160
Outside diameter	in.	1.33	2.75	4.50	6.00	8.00
a	mm (in.)	38 (1.50)	63 (2.48)	105 (4.13)	135 (5.32)	167 (6.58)
h	mm (in.)	76 (2.99)	126 (4.96)	210 (8.27)	270.(10.63)	334 (13.15)

Ordering Information

Stainless steel DIN 1.4301						
Cross with a rotatable flange						
on each axis	Part No.	**836 34**	**836 35**	**836 36**	**836 37**	**836 38**

Not suited for the mounting of turbo molecular pumps

Double Crosses

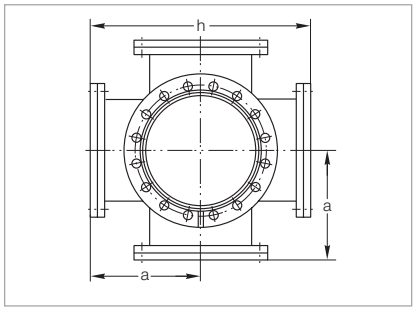

Dimensional drawing for the double crosses

For missing dimensions see “Technical Data” at the beginning of the Chapter “CF Flanges”

Technical Data

DN	CF	40	63	100	160
Outside diameter	in.	2.75	4.50	6.00	8.00
a	mm (in.)	63 (2.48)	105 (4.13)	135 (5.32)	167 (6.58)
h	mm (in.)	126 (4.96)	210 (8.27)	270 (10.63)	334 (13.15)

Ordering Information

Stainless steel DIN 1.4301					
Dopuble Cross with a rotatable flange					
on each axis	Part No.	**836 45**	**836 46**	**836 47**	**836 48**

Not suited for the mounting of turbo molecular pumps

Important: In the table of Chapter “General” the German designation for the type of steel is also stated in accordance with AISI.

CF/ISO-KF Adaptors

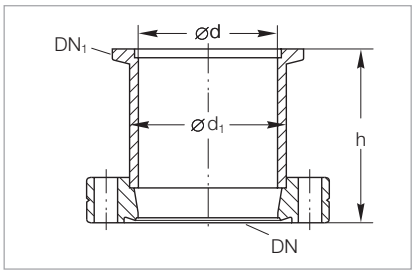

Dimensional drawing for the CF/ISO-KF adaptors

For missing dimensions see “Technical Data” at the beginning of the Chapter “CF Flanges”

Technical Data

DN	**CF**	16	16	40	40	40	63
Outside diameter	**in.**	1.33	1.33	2.75	2.75	2.75	4.50
DN_1	**ISO-KF**	16	25	16	25	40	40
d	**mm (in.)**	16 (0.63)	16 (0.63)	16.0 (0.63)	26.0 (1.02)	37.0 (1.36)	41.0 (1.61)
h	**mm (in.)**	35 (1.38)	35 (1.38)	30 (1.18)	30 (1.18)	50 (1.97)	35 (1.38)
d_1 (tube)	**mm (in.)**	20 (0.79)	20 (0.79)	20 (0.79)	30 (1.18)	41 (1.61)	45 (1.77)

Ordering Information

Stainless steel DIN 1.4301	Part No.	**837 81**	**837 83**	**837 82**	**837 84**	**837 36**	**837 86**

CF/ISO-K Adaptors

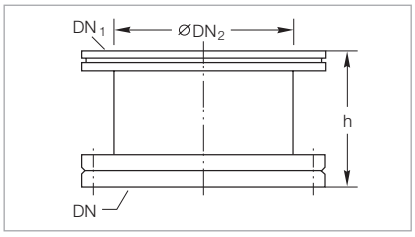

Dimensional drawing for the CF/ISO-K adaptors

For missing dimensions see “Technical Data” at the beginning of the Chapter “CF Flanges”

Technical Data

DN	**CF**	63	100	160
Outside diameter	**in.**	4.50	6.00	8.00
DN_1	**ISO-K**	63	100	160
DN_2	**mm (in.)**	66 (2.60)	104 (4.09)	153 (6.02)

Ordering Information

Stainless steel DIN 1.4301	Part No.	**837 01**	**837 02**	**837 03**

Important: In the table of Chapter “General” the German designation for the type of steel is also stated in accordance with AISI.

Flexible Connecting Components (CF Bellows)

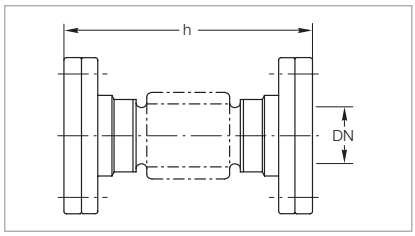

Dimensional drawing for the CF bellows

For missing dimensions see “Technical Data” at the beginning of the Chapter “CF Flanges”

Technical Data

DN	CF	16	40	63	100
Outside diameter	in.	1.33	2.75	4.50	6.00
h	mm (in.)	76 ±1,5 (2.99 ±0.06)	126 ±2 (4.96 ±0.08)	139 ±2 (5.47 ±0.08)	142 ±2 (5.59 ±0.08)

Ordering Information

Stainless steel CF bellows with one rotatable flange	Part No.	**880 01**	**880 02**	**880 03**	**880 04**

Flexible Connecting Components (CF Corrugated Hoses)

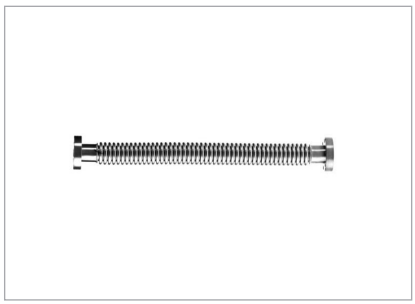

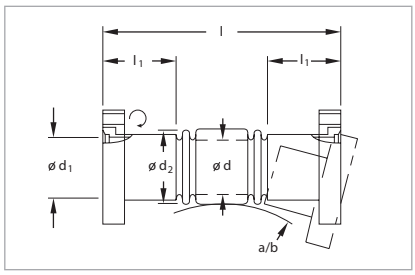

Dimensional drawing for the CF corrugated hoses

For missing dimensions see “Technical Data” at the beginning of the Chapter “CF Flanges”

Technical Data

DN	CF	16	40	16	40	16	16
Outside diameter	in.	1.33	2.75	1.33	2.75	1.33	1.33
l	mm	250 (9.84)	250 (9.84)	500 (19.69)	500 (19.69)	750 (29.53)	1000 (39.37)
l_1	mm	23 (0.91)	23 (0.91)	23 (0.91)	23 (0.91)	23 (0.91)	23 (0.91)
d	mm	15 (0.59)	15 (0.59)	15 (0.59)	15 (0.59)	15 (0.59)	15 (0.59)
d_1	mm	16 (0.63)	16 (0.63)	16 (0.63)	16 (0.63)	16 (0.63)	16 (0.63)
d_2	mm	22.5 (0.89)	22.5 (0.89)	22.5 (0.89)	22.5 (0.89)	22.5 (0.89)	22.5 (0.89)
a	mm	70 (2.76)	70 (2.76)	70 (2.76)	70 (2.76)	70 (2.76)	70 (2.76)
b	mm	50 (1.97)	50 (1.97)	50 (1.97)	50 (1.97)	50 (1.97)	50 (1.97)

Ordering Information

Stainless steel CF corrugated hose with one rotatable flange	Part No.	**885 56**	**85 57**	**885 68**	**885 69**	**885 65**	**885 73**

Important: In the table of Chapter “General” the German designation for the type of steel is also stated in accordance with AISI.

Bolts with Bolt Nut Plate and Washers

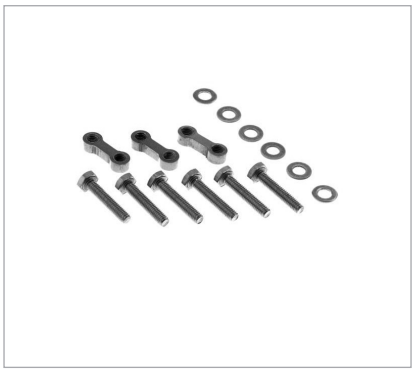

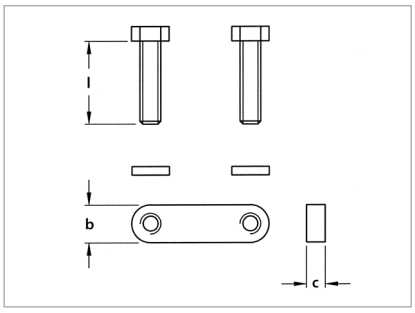

Dimensional drawing for the bolts with bolt nut plate and washers

Technical Data

DN	CF	16	40	63	100	160
Outside diameter	in.	1.33	2.75	4.5	6	8
Dimensions (d x l)	mm (in.)	M 4 x 20 (M 4 x 0.79)	M 6 x 35 (M 6 x 1.38)	M 8 x 45 (M 8 x 1.77)	M 8 x 50 (M 8 x 1.97)	M 8 x 55 (M 8 x 2.17)
l	mm (in.)	20 (0.79)	35 (1.38)	45 (1.77)	50 (1.97)	55 (2.15)
b	mm (in.)	7 (0.28)	10 (0.39)	12 (0.47)	12 (0.47)	12 (0.47)
c	mm (in.)	4 (0.16)	5 (0.20)	8 (0.32)	8 (0.32)	8 (0.32)
Sealing torque	Nm (lbf-in)	4 (35.40)	10 (88.51)	20 (177.02)	20 (177.02)	20 (177.02)
Quantity per set						
Bolts		6	6	8	16	20
Bolt nut plate		3	3	4	8	10
Washers		6	6	8	16	20

Ordering Information

Set	Part No.	**838 87**	**838 88**	**838 89**	**83890**	**838 91**

Hexagon Bolts, Set for CF Flanges

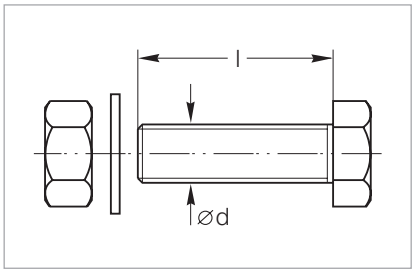

Dimensional drawing for the hexagon bolts for CF flanges

Technical Data

DN	CF	16	40	63	100	160	200	250
Outside diameter	in.	1.33	2.75	4.5	6	8	10	12
Dimensions (d x l)	mm (in.)	M 4 x 20 (M 4 x 0.79)	M 6 x 35 (M 6 x 1.38)	M 8 x 45 (M 8 x 1.77)	M 8 x 50 (M 8 x 1.97)	M 8 x 55 (M 8 x 2.17)	M8 x 60 (M 8 x 2.36)	M8 x 60 (M 8 x 2.36)
Sealing torque	Nm (lbf-in)	4 (35.40)	10 (88.51)	20 (177.02)	20 (177.02)	20 (177.02)	20 (177.02)	20 (177.02)
Quantity per set								
Bolts		25	25	25	25	25	25	25
Bolt nut plate		25	25	25	25	25	25	25
Washers		25	25	25	25	25	25	25

Ordering Information

Set	Part No.	**839 00**	**839 01**	**838 81**	**839 04**	**839 05**	**839 07**	**839 07** [1]

[1] 2 sets are required

Important: In the table of Chapter "General" the German designation for the type of steel is also stated in accordance with AISI.

Set Screws, Nuts and Washers for CF Flanges

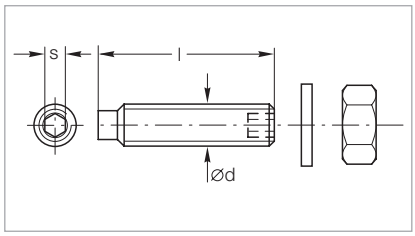

Dimensional drawing for the set screws, nuts and washers for CF flanges

Technical Data

DN	CF	16	40	63 - 100	63 - 100
Dimensions (d x l)	mm (in.)	M 4 x 20 (M 4 x 0.79)	M 6 x 35 (M 6 x 1.38)	M 8 x 45 (M 8 x 1.77)	M 8 x 50 (M 8 x 1.97)
s	mm (in.)	2.0 (0.08)	3.0 (0.12)	4.0 (0.16)	4.0 (0.16)
Sealing torque	Nm (lbf-in)	4 (35.40)	10 (88.51)	20 (177.02)	20 (177.02)
Quantity per set					
Bolts		6	6	16	16
Nuts		6	6	16	16
Washers		6	6	16	16

Ordering Information

Set	Part No.	**839 10**	**839 11**	**839 13**	**83913V01**

Important: In the table of Chapter “General” the German designation for the type of steel is also stated in accordance with AISI.

Notes

Observation Windows for Vacuum Systems

Observation of the phenomena in the vacuum chamber is very important for many vacuum processes. Measurements and monitoring can often be accomplished only by means of external instruments used under normal atmospheric pressure conditions.

This calls for highly transparent, rugged observation windows featuring a wide angle view.

Advantages to the User

- Flat design
- Easy to fit and remove
- Easy to clean
- Wide viewing angle
- Can be baked out up to 150 °C (302 °F)
- May be combined with ISO-KF and ISO-K components
- No special mounting components are required
- The FPM (FKM) O-ring seals against the atmosphere (integrated centering ring)
- Each observation window is subjected to a leak test (thereby ensuring safe operation!)

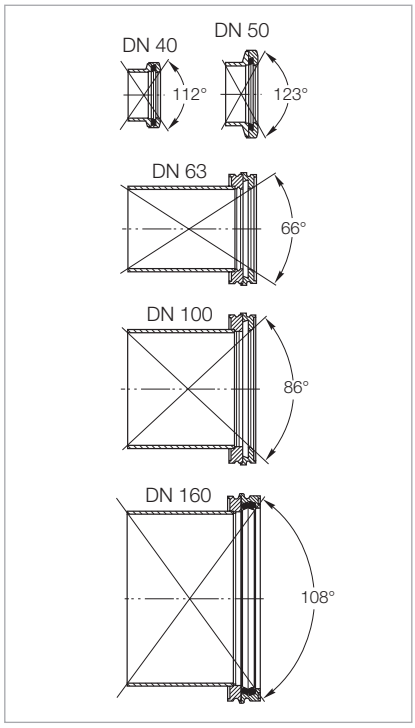

Viewing angle into vacuum chamber through observation window DN 40 ISO-KF – DN 160 ISO-K (mounting on matching flanges with tubulation)

ISO-KF/ISO-K Observation Windows

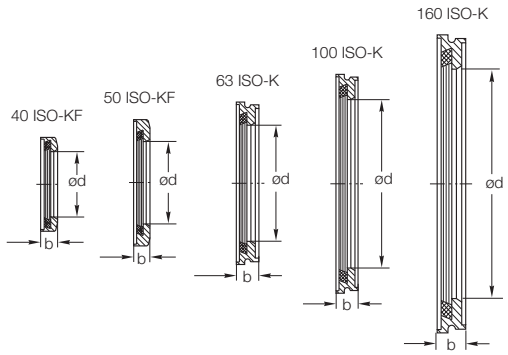

Window dimensions for the observation windows

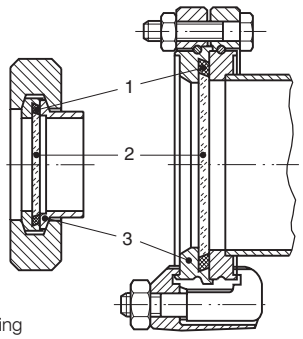

1 O-ring
2 Glass
3 Flange

ISO-KF and ISO-K observation windows, fully installed

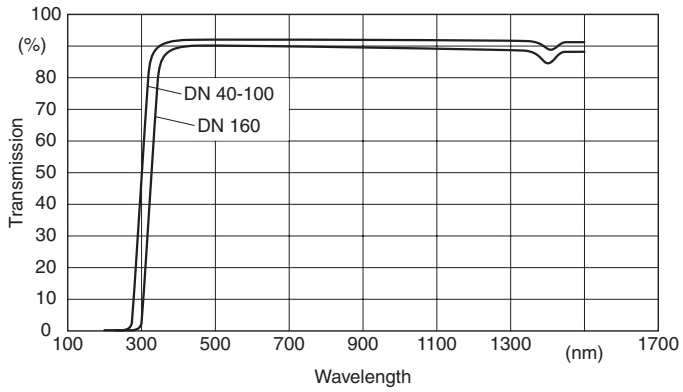

Transmittance as a function of the wavelength for Leybold viewports DN 40 ISO-KF to DN 160 ISO-K for different window thicknesses

Technical Data

Schaugläser

DN		40 ISO-KF	50 ISO-KF	63 ISO-K	100 ISO-K	160 ISO-K
Thickness of the glass	**mm (in.)**	4 (0.16)	4 (0.16)	4 (0.16)	5 (0.20)	9 (0.35)
Diameter of the glass	**mm (in.)**	44 (1.73)	54 (2.13)	75 (2.95)	109 (4.29)	160 (6.30)
b	**mm (in.)**	10 (0.39)	10 (0.39)	13.5 (0.53)	13 (0.51)	17 (0.67)
d	**mm (in.)**	40 (1.57)	50 (1.97)	70 (2.76)	102 (4.02)	153 (6.02)
Viewing angle	°	112	123	66	86	108

The glass used is a borosilicate glass (BOROFLOAT® 33) with a refractive index of n = 1.472

Dielectric number (at 25 °C (77 °F))	4.8 at 1 MHz
Flange material	Stainless steel 1.4301
Glass material	Borosilicate
O-ring material	FPM (FKM)
Leak rate	< 10^{-8} mbar x l/s

Ordering Information

Schaugläser

Set	Part No.	Part No.	Part No.	Part No.	Part No.
DN	40 ISO-KF	50 ISO-KF	63 ISO-K	100 ISO-K	160 ISO-K
Observation Windows	**210 131**	**210 132**	**210 133**	**210 134**	**210 135**

CF Observation Windows

Standard glass is normally only used for visual observations, for photography of experiment details and, among other things, for pyrometer measurements.

Advantages to the User

- Optically plane-parallel glass surface up to just before the edge
- Flange with a wide viewing angle

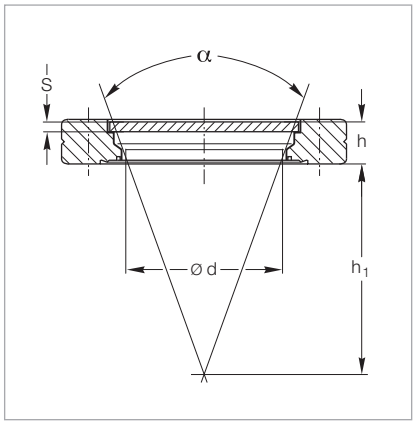

Dimensional drawing for CF observation windows

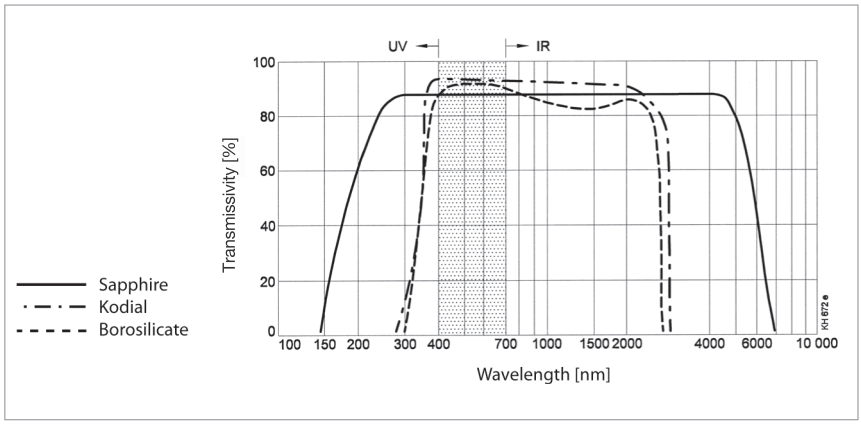

Optical transmissivity for the CF observation windows

Technical Data

DN	CF	40	63	100	160
Thickness of the glass (s)	mm (in.)	3 (0.12)	3.5 (0.14)	6 (0.24)	8 (0.32)
Diameter of viewing area (d)	mm (in.)	38 (1.50)	65 (2.56)	90 (3.54)	135 (5.32)
Viewing angle (⌀)	°	38	57	71	92
Spacing of the glass (h), approx.	mm (in.)	11 (0.43)	16.4 (0.65)	8 (0.32)	10 (0.39)
Viewing distance (h_1)	mm (in.)	50 (1.97)			
Wavelength range	mm (in.)	400 to 3000			
Material		Vacon (compensation ring)			
Mean transmission ratio	%	93 in the visible range			
Type of glass		Kodial			
Max. heating rate	min	5			
Max. bakeout temperature	°C (°F)	400 (752)			

Ordering Information

CF observation window	Part No.	**210 112**	**210 114**	**210 115**	**210 116**

CF Sapphire Observation Windows

Sapphire exhibits a transmissivity range of 250 nm to 5500 nm. The infrared limit is shifted far in to the infrared range. For this reason, glass of this type is used in connection with sun simulation tests, Laser experiments, high-temperature plasma measurements and spectroscopic measurements, for example.

Advantages to the User

- Optically plane-parallel glass surface up to just before the edge

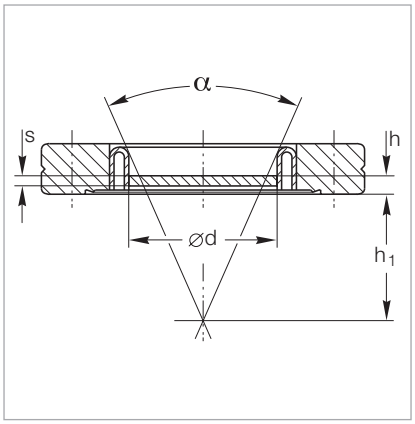

Dimensional drawing for the CF sapphire observation windows

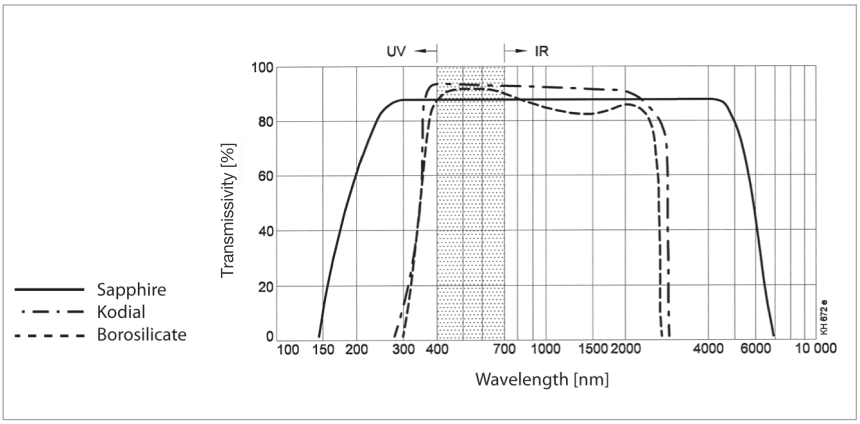

Optical transmissivity for the CF Sapphire observation windows

Technical Data

DN	CF	40
Thickness of the glass (s)	mm (in.)	3 (0.12)
Diameter of viewing area (d)	mm (in.)	23 (0.91)
Viewing angle (⌀)	°	23
Spacing of the glass (h), approx.	mm (in.)	10 (0.39)
Viewing distance (h_1)	mm (in.)	50 (1.97)
Wavelength range	mm (in.)	250 to 5500
Mean transmission ratio	%	> 80
Type of glass		Sapphire
Max. heating rate	min	5
Max. bakeout temperature	°C (°F)	400 (752)

Ordering Information

CF sapphire observation windows	Part No.	**210 122**

Notes

Notes

Sales and Service

Germany

Leybold GmbH
Bonner Strasse 498
D-50968 Cologne
T: +49-(0)221-347 1234
F: +49-(0)221-347 31234
sales@leybold.com
www.leybold.com

Leybold GmbH
Sales Area North
Branch Office Berlin
Industriestrasse 10b
D-12099 Berlin
T: +49-(0)30-435 609 0
F: +49-(0)30-435 609 10
sales.bn@leybold.com

Leybold GmbH
Sales Office South
Branch Office Munich
Karl-Hammerschmidt-Strasse 34
D-85609 Aschheim-Dornach
T: +49-(0)89-357 33 9-10
F: +49-(0)89-357 33 9-33
sales.mn@leybold.com
service.mn@leybold.com

Leybold Dresden GmbH
Service Competence Center
Zur Wetterwarte 50, Haus 304
D-01109 Dresden
Service:
T: +49-(0)351-88 55 00
F: +49-(0)351-88 55 041
info.dr@leybold.com

Europe

Belgium

Leybold Nederland B.V.
Belgisch bijkantoor
Leuvensesteenweg 542-9A
B-1930 Zaventem
Sales:
T: +32-2-711 00 83
F: +32-2-720 83 38
sales.zv@leybold.com
Service:
T: +32-2-711 00 82
F: +32-2-720 83 38
service.zv@leybold.com

France

Leybold France S.A.S.
Parc du Technopolis, Bâtiment Beta
3, Avenue du Canada
F-91940 Les Ulis cedex
Sales and Service:
T: +33-1-69 82 48 00
F: +33-1-69 07 57 38
info.ctb@leybold.com
sales.ctb@leybold.com

Leybold France S.A.S.
Valence Factory
640, Rue A. Bergès
B.P. 107
F-26501 Bourg-lès-Valence Cedex
T: +33-4-75 82 33 00
F: +33-4-75 82 92 69
marketing.vc@leybold.com

Great Britain

Leybold UK LTD.
Unit 9
Silverglade Business Park
Leatherhead Road
Chessington
Surrey (London)
KT9 2QL
Sales:
T: +44-13-7273 7300
F: +44-13-7273 7301
sales.ln@leybold.com
Service:
T: +44-13-7273 7320
F: +44-13-7273 7303
service.ln@leybold.com

Italy

Leybold Italia S.r.l.
Via Filippo Brunelleschi 2
I-20093 Cologno Monzese
Sales:
T: +39-02-27 22 31
F: +39-02-27 20 96 41
sales.mi@leybold.com
Service:
T: +39-02-27 22 31
F: +39-02-27 22 32 17
service.mi@leybold.com

Netherlands

Leybold Nederland B.V.
Floridadreef 102
NL-3565 AM Utrecht
Sales and Service:
T: +31-(30) 242 63 30
F: +31-(30) 242 63 31
sales.ut@leybold.com
service.ut@leybold.com

Switzerland

Leybold Schweiz AG
Hinterbergstrasse 56
CH-6312 Steinhausen
Warehouse and shipping address:
Riedthofstrasse 214
CH-8105 Regensdorf
Sales:
T: +41-44-308 40 50
F: +41-44-302 43 73
sales.zh@leybold.com
Service:
T: +41-44-308 40 62
F: +41-44-308 40 60
service.zh@leybold.com

Spain

Leybold Hispánica, S.A.
C/. Huelva, 7
E-08940 Cornellá de Llobregat
(Barcelona)
Sales:
T: +34-93-666 43 11
F: +34-93-666 43 70
sales.ba@leybold.com
Service:
T: +34-93-666 46 11
F: +34-93-685 43 70
service.ba@leybold.com

America

USA

Leybold USA Inc.
6005 Enterprise Drive
USA-Export, PA 15632

Sales and Service:
T: +1-800-764-5369
F: +1-800-325-4353
F: +1-800-215-7782
info.ex@leybold.com

Brazil

Leybold do Brasil Ltda.
Av. Tamboré, 937, Tamboré
Distrito Industrial
CEP 06460-000 Barueri - SP
Sales und Service:
T: +55 11 3376 4604
info.ju@leybold.com

Asia

P. R. China

Leybold (Tianjin)
International Trade Co. Ltd.
Beichen Economic
Development Area (BEDA),
No. 8 Western Shuangchen Road
Tianjin 300400
China
Sales and Service:
T: +86-400 038 8989
T: +86-800 818 0033
F: +86-22-2697 4061
F: +86-22-2697 2017
sales.tj@leybold.com
service.tj@leybold.com

India

Leybold India Pvt Ltd.
T-97/2, MIDC Bhosari
Pune-411 026
Indien
Sales and Service:
T: +91-80-2783 9925
F: +91-80-2783 9926
sales.bgl@leybold.com
service.bgl@leybold.com

Japan

Leybold Japan Co., Ltd.
Headquarters
Shin-Yokohama A.K.Bldg., 4th floor
3-23-3, Shin-Yokohama
Kohoku-ku, Yokohama-shi
Kanagawa-ken 222-0033
Japan
Sales:
T: +81-45-471-3330
F: +81-45-471-3323
sales.yh@leybold.com

Leybold Japan Co., Ltd.
Tsukuba Technical Service Center
1959, Kami-yokoba
Tsukuba-shi, Ibaraki-shi 305-0854
Japan
Service:
T: +81-29 839 5480
F: +81-29 839 5485
service.iik@leybold.com

Malaysia

Leybold Malaysia
Leybold Singapore Pte Ltd.
No. 1 Jalan Hi-Tech 2/6
Kulim Hi-Tech Park
Kulim, Kedah Darul
Aman 09000
Malaysia
Sales and Service:
T: +604 4020 222
F: +604 4020 221
sales.ku@leybold.com
service.ku@leybold.com

South Korea

Leybold Korea Ltd.
3F. Jellzone 2 Tower
Jeongja-dong 159-4
Bundang-gu Sungnam-si
Gyeonggi-do
Bundang 463-384, Korea
Sales:
T: +82-31 785 1367
F: +82-31 785 1359
sales.bd@leybold.com
Service:
623-7, Upsung-Dong
Cheonan-Si
Chungcheongnam-Do
Korea 330-290
T: +82-41 589 3035
F: +82-41 588 0166
service.cn@leybold.com

Singapore

Leybold Singapore Pte Ltd.
42 Loyang Drive
Loyang Industrial Estate
Singapore 508962
Singapore
Sales and Service:
T: +65-6303 7030
F: +65-6773 0039
sales.sg@leybold.com
service.sg@leybold.com

Taiwan

Leybold Taiwan Ltd.
10F., No. 32, Chenggong 12th St.,
Zhubei City, Hsinchu County 302
Taiwan, R.O.C.
Sales and Service:
T: +886-3-500 1688
F: +886-3-550 6523
sales.hc@leybold.com
service.hc@leybold.com

Headquarter
Leybold GmbH
Bonner Strasse 498
D-50968 Cologne
T: +49-(0)221-347-0
F: +49-(0)221-347-1250
info@leybold.com

Leybold

www.leybold.com